YAMAHA

PARTS CATALOGUE

YFM600FM (5GT6) U49
YFM600FMC (5GT7) CALIFORNIA
YFM600FHM (5GT9) U49
YFM600FHMC (5GTA) CALIFORNIA

YAMAHA GENUINE Parts & Accessories

105GT-110E2

YFM600FM/YFM600FMC/
YFM600FHM/YFM600FHMC
PARTS CATALOGUE
©2001 by Yamaha Motor Co., Ltd.
1st Edition, Jan. 2001
All rights reserved.
Any reprinting or unauthorized use
without the written permission of
Yamaha Motor Co., Ltd.
is expressly prohibited.
Printed in Japan

YAMAHA

FOREWORD

This Parts Catalogue is related to the parts for the model(s) in the below frame. When you are ordering replacement parts, please refer to this Parts Catalogue and quote both part numbers and part names correctly.

YFM600FM(5GT6), YFM600FMC(5GT7), YFM600FHM(5GT9), YFM600FHMC(5GTA)

1. Modifications or additions which have been made after issue of the Parts Catalogue will be announced in the Yamaha Parts News.
   It is advisable that you make necessary corrections to the Parts Catalogue according to the Yamaha Parts News.

2. Abbreviations
   The Following abbreviations are used in this Parts Catalogue.
   "UR" Use specified parts number.
   "UN" Use as many as needed.
   "AP" Alternate Parts
   "LM" Local Made (Parts need to be ordered locally)
   "F#" Frame No. (Applicable machine No.)

3. Parts, which are to be supplied in an assembly, are listed with a dot(.) in front of the part name as shown below.

   EXAMPLE
   CARBURETOR ASSY
   .JET, PILOT
   .NOZZLE, MAIN

4. Number of component for assembly
   The numeral appearing to the right of each component part indicates the quantity of parts for each assembly unit.

   EXAMPLE

PART NO.	DESCRIPTION	Q'TY	REMARKS
2F5-83310-60	FRONT FLASHER LIGHT ASSY	2	
115-83311-60	.BULB (6V-18W)	1	
1M1-83309-60	.REFLECTOR	1	

5. Applicable colors of graphics are represented in the "REMARKS" as shown below.

PART NO.	DESCRIPTION	Q'TY	REMARKS
2N4-24110-00-X5	.FUEL TANK COMP.	2	MXR
3J1-24240-10	.GRAPHIC, FUEL TANK	1	for MXR

6. Applicable Serial No.

   Engine Serial No.

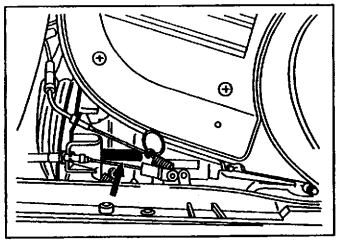

   Frame Serial No.

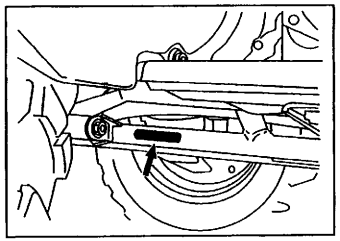

7. Note that the illustrations for reference in finding parts numbers, not to be used for assembling. When assembling, please use the applicable service manual.

8. The asterisk (*) before a reference number indicates modification items after the first edition.

MODEL LABEL

(1) A label called "Model Label" is affixed in the location as indicated in (3) below. When using this parts catalogue, please be sure to cross-refer the "model code – production code No." in the catalogue to the "model code – production code No. "indicated on the Model Label affixed onto the product concemed.

(2) "Model Label"Indication

a b
○ xxxx – xxx
● x c

a: Model Type Code
b: Production Code No.
c: Colouring Type

○ 4TW1–010
● A

(3) Model Label Affixing Location

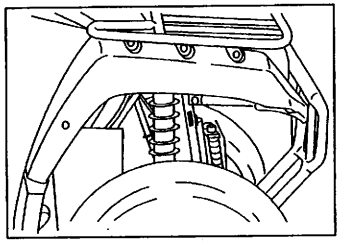

(4) Model Code – Production Code Number of Model Listed in This Parts Catalog

Model Code	Production Code No.	Country (destination)	Model Code	Production Code No.	Country (destination)
5GT6	010	U49			
5GT7	010	CALIFORNIA			
5GT9	010	U49			
5GTA	010	CALIFORNIA			

(5) Colouning Information

Model Code	Colouring type code	Colour code	Colour Name	Abbreviation
5GT6 5GT7 5GT9 5GTA	A	00K0	PASTEL DEEP GREEN	PDG
5GT6 5GT7	B	00TR	POMANTIQUE ROUGE	RTR
	C	0598	DARK GRAYISH YELLOW SOLID 1	DNYS1

CONTENTS

ENGINE

CYLINDER HEAD 1
CYLINDER 3
CRANKSHAFT. PISTON 4
VALVE 5
CAMSHAFT. CHAIN 6
BLOWER 7
OIL PUMP 8
INTAKE 10
CARBURETOR 12
EXHAUST 14
CRANKCASE 15
CRANKCASE COVER 1 17
STARTER 19
CLUTCH 20
TRANSMISSION 22
MIDDLE DRIVE GEAR 24
SHIFT CAM. FORK 26
SHIFT SHAFT 27

CHASSIS

FRAME 28
FRONT FENDER 30
REAR FENDER 31
REAR ARM 33
DRIVE SHAFT 34
FRONT DIFFERENTIAL 37
REAR SUSPENSION 40
STEERING 41
FRONT SUSPENSION. WHEEL 43
FUEL TANK 44
SEAT 45
FRONT WHEEL 46
FRONT BRAKE 48
REAR WHEEL 49
STEERING HANDLE. CABLE 51
FRONT MASTER CYLINDER 53
STAND. FOOTREST 54
GUARD 56
GENERATOR 57
STARTING MOTOR 58
METER 59
HEADLIGHT 60
TAILLIGHT 61
HANDLE SWITCH. LEVER 62
ELECTRICAL 1 63
ELECTRICAL 2 64
EMBLEM.LABEL 1 67

INDEX

NUMERICAL INDEX 68

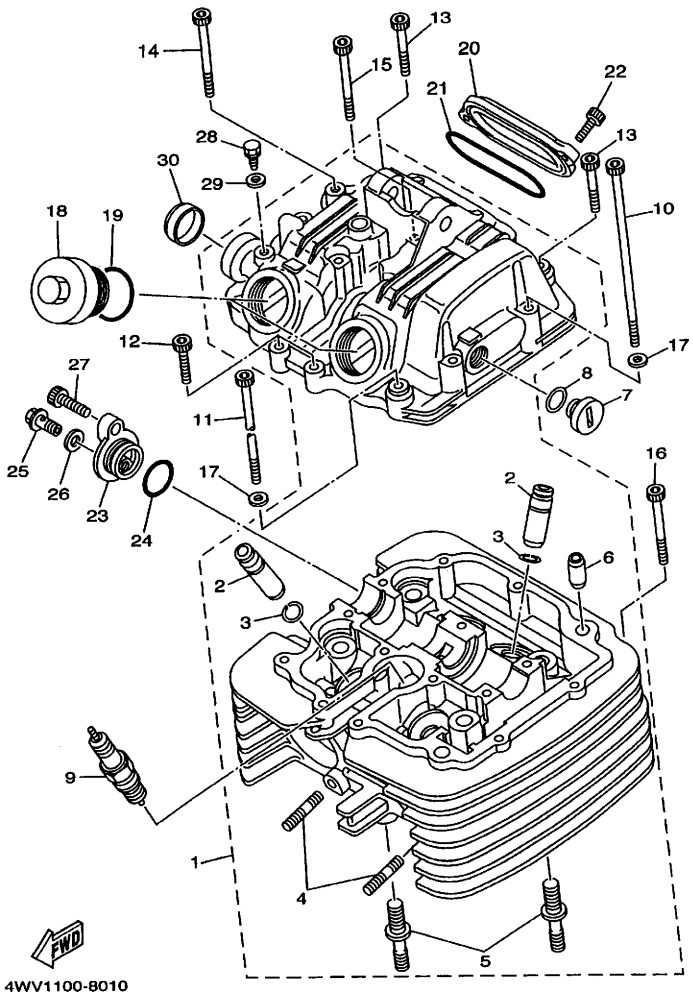

4WV1100-8010

FIG. 1 CYLINDER HEAD

REF. NO.	PART NO.	DESCRIPTION	5GT6	5GT7	5GT9	5GTA		REMARKS
1	3TB-11101-02	CYLINDER HEAD ASSY	1	1	1	1		
2	4H7-11133-10	.GUIDE, INTAKE VALVE	4	4	4	4		
3	93440-12052	.CIRCLIP	4	4	4	4		
4	90116-06475	.BOLT, STUD	4	4	4	4		
5	90116-10378	.BOLT, STUD	2	2	2	2		
6	99530-10116	.PIN, DOWEL	2	2	2	2		
7	90340-14117	PLUG, STRAIGHT SCREW	1	1	1	1		
8	93210-13657	O-RING	1	1	1	1		
9	94701-00275	PLUG, SPARK (NGK DP8EA-9)	1	1	1	1		
10	91317-06125	BOLT	2	2	2	2		
11	91317-06115	BOLT	1	1	1	1		
12	91317-06025	BOLT	4	4	4	4		
13	91317-06040	BOLT	2	2	2	2		
14	91317-06055	BOLT	6	6	6	6		
15	90109-063E9	BOLT	1	1	1	1		
16	91317-06050	BOLT	1	1	1	1		
17	92907-06600	WASHER, PLATE	3	3	3	3		
18	1L9-11186-00	COVER, CYLINDER HEAD SIDE 2	2	2	2	2		
19	93210-32172	O-RING	2	2	2	2		
20	5Y1-11187-00	COVER, CYLINDER HEAD SIDE 3	1	1	1	1		
21	93210-62523	O-RING	1	1	1	1		
22	91317-06018	BOLT	2	2	2	2		
23	3TB-12215-01	CAP, TENSIONER CASE	1	1	1	1		
24	93210-19522	O-RING	1	1	1	1		
25	90401-06001	BOLT, UNION	1	1	1	1		
26	90430-06192	GASKET	1	1	1	1		
27	91317-06020	BOLT	1	1	1	1		

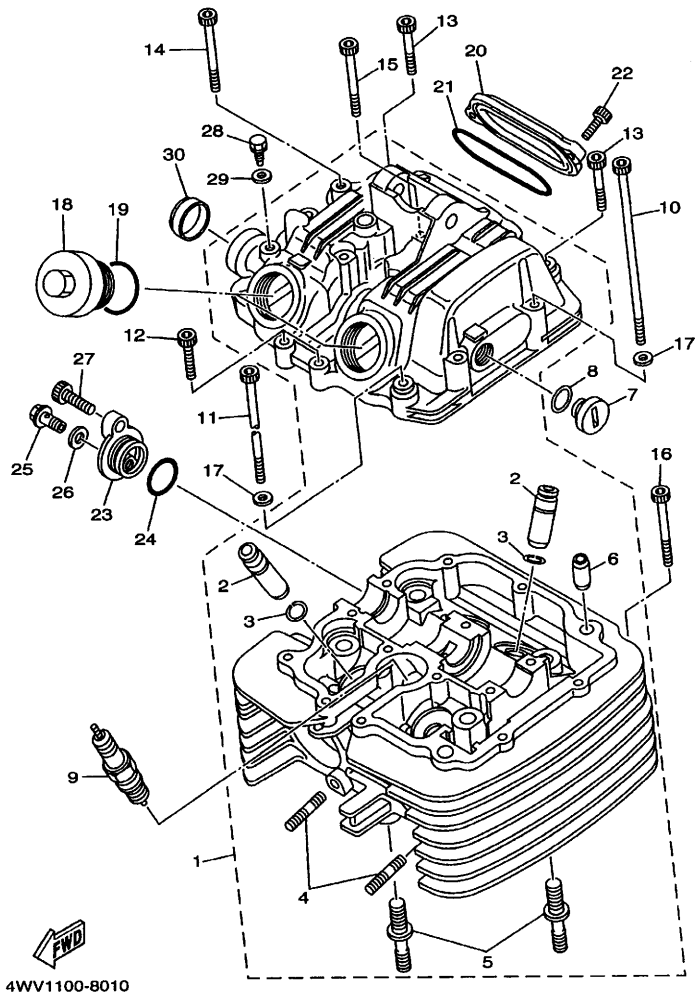

FIG. 1 CYLINDER HEAD

REF. NO.	PART NO.	DESCRIPTION	5GT6	5GT7	5GT9	5GTA		REMARKS
28	90109-06418	BOLT	1	1	1	1		
29	90430-06014	GASKET	1	1	1	1		
30	90338-22207	PLUG	1	1	1	1		

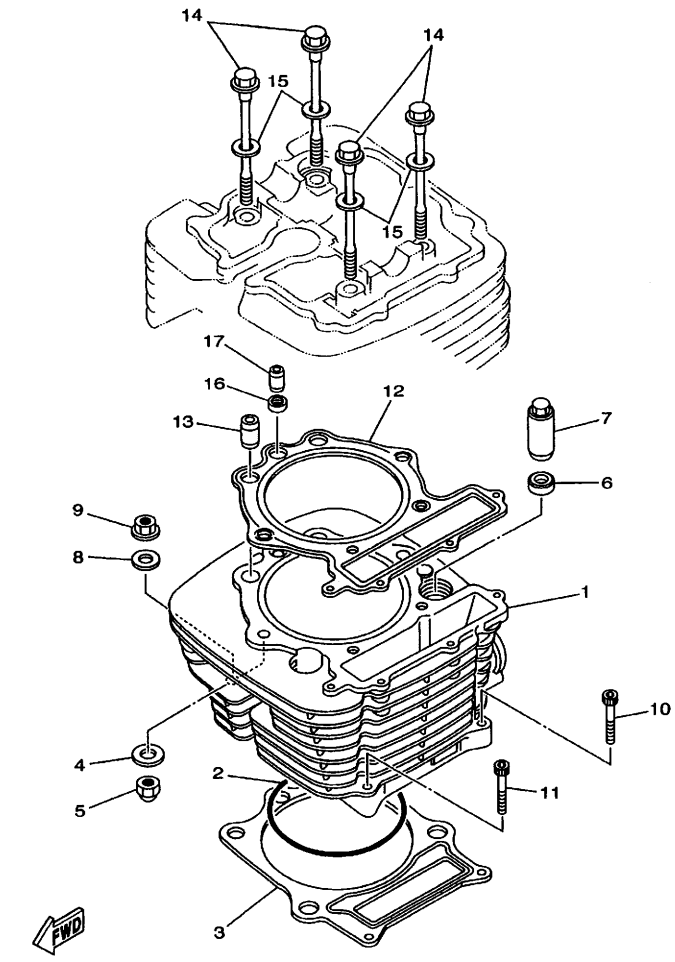

FIG. 2 CYLINDER

REF. NO.	PART NO.	DESCRIPTION	5GT6	5GT7	5GT9	5GTA		REMARKS
1	3TB-11310-00	CYLINDER	1	1	1	1		
2	93210-98473	O-RING	1	1	1	1		
3	1VJ-11351-00	GASKET, CYLINDER	1	1	1	1		
4	90201-080L8	WASHER, PLATE	2	2	2	2		
5	90176-08026	NUT, CROWN	2	2	2	2		
6	90201-10590	WASHER, PLATE	2	2	2	2		
7	90179-10201	NUT	2	2	2	2		
8	90201-10124	WASHER, PLATE	2	2	2	2		
9	90179-10279	NUT	2	2	2	2		
10	91317-06035	BOLT	1	1	1	1		
11	90110-06204	BOLT, HEXAGON SOCKET HEAD	1	1	1	1		
12	2KF-11181-01	GASKET, CYLINDER HEAD 1	1	1	1	1		
13	99530-12016	PIN, DOWEL	2	2	2	2		
14	90105-08505	BOLT, WASHER BASED	4	4	4	4		
15	90201-085L3	WASHER, PLATE	4	4	4	4		
16	90430-08178	GASKET	1	1	1	1		
17	99530-08016	PIN, DOWEL	1	1	1	1		

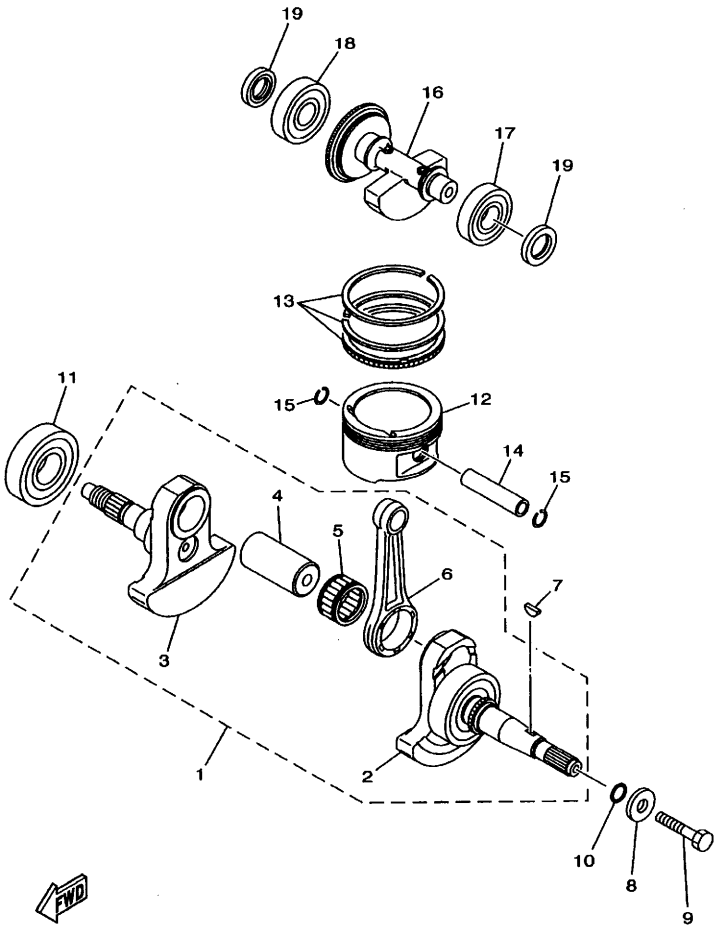

5GT1100-9031

FIG. 3 CRANKSHAFT. PISTON

REF. NO.	PART NO.	DESCRIPTION	5GT6	5GT7	5GT9	5GTA		REMARKS
1	5GT-11400-00	CRANKSHAFT ASSY	1	1	1	1		
2	5GT-W1141-00	.CRANK 1	1	1	1	1		
3	5GT-W1142-00	.CRANK 2	1	1	1	1		
4	4WV-11681-10	.PIN, CRANK 1	1	1	1	1		
5	93310-637D3	.BEARING	1	1	1	1		
6	5GT-11651-00	.ROD, CONNECTING	1	1	1	1		
7	90280-16053	KEY, WOODRUFF	1	1	1	1		
8	90201-10321	WASHER, PLATE	1	1	1	1		
9	90101-10568	BOLT	1	1	1	1		
10	93210-16290	O-RING	1	1	1	1		
11	93306-30702	BEARING (B6307)	1	1	1	1		
12	3TB-11631-00-Y0	PISTON (STD)	1	1	1	1		
	3TB-11636-00	PISTON (0.50MM O/S)	1	1	1	1		AP
	3TB-11638-00	PISTON (1.00MM O/S)	1	1	1	1		AP
13	34L-11610-00	PISTON RING SET (STD)	1	1	1	1		
	34L-11610-20	PISTON RING SET (0.50MM O/S)	1	1	1	1		AP
	34L-11610-40	PISTON RING SET (1.00MM O/S)	1	1	1	1		AP
14	1JK-11633-01	PIN, PISTON	1	1	1	1		
15	93450-24028	CIRCLIP	2	2	2	2		
*16	5GT-11500-00	BALANCER ASSY	1	1	1	1		
17	93306-30525	BEARING (B6305)	1	1	1	1		
18	93306-30534	BEARING	1	1	1	1		
19	93101-25106	OIL SEAL	2	2	2	2		

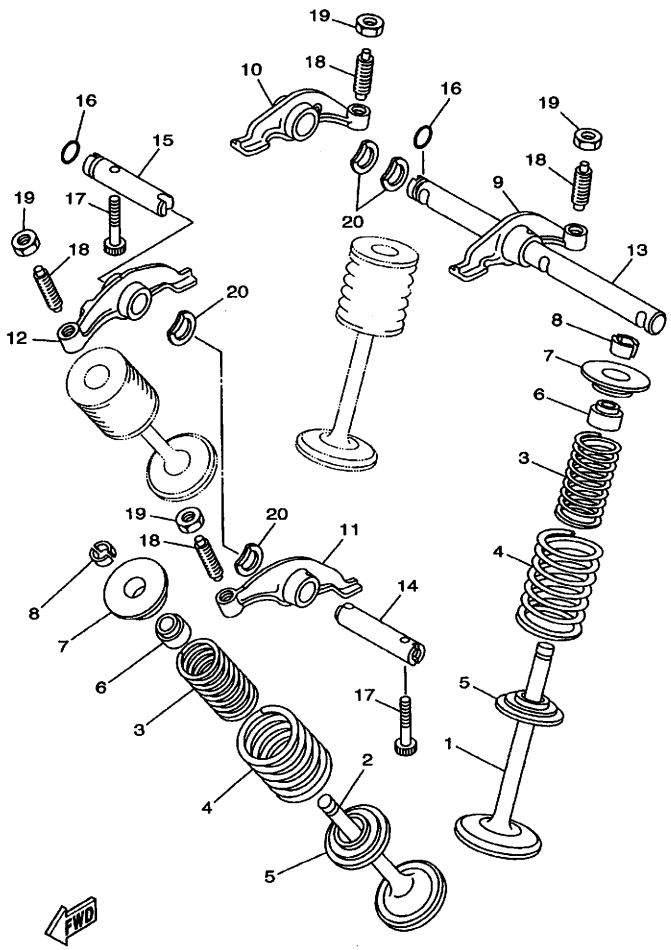

4WV1100-8040

FIG. 4 VALVE

REF. NO.	PART NO.	DESCRIPTION	5GT6	5GT7	5GT9	5GTA		REMARKS
1	4WV-12111-00	VALVE, INTAKE	2	2	2	2		
2	4WV-12121-00	VALVE, EXHAUST	2	2	2	2		
3	5Y1-12113-00	SPRING, VALVE INNER	4	4	4	4		
4	5Y1-12114-00	SPRING, VALVE OUTER	4	4	4	4		
5	4H7-12116-00	SEAT, VALVE SPRING	4	4	4	4		
6	1J7-12119-01	SEAL, VALVE STEM	4	4	4	4		
7	2F3-12117-00	RETAINER, VALVE SPRING	4	4	4	4		
8	1J7-12118-00	COTTER, VALVE	8	8	8	8		
9	34K-12151-00	ARM, VALVE ROCKER	1	1	1	1		
10	34K-12161-00	ARM, VALVE ROCKER 2	1	1	1	1		
11	4WV-12162-00	ARM, VALVE ROCKER 3	1	1	1	1		
12	34K-12163-00	ARM, VALVE ROCKER 4	1	1	1	1		
13	2NX-12146-00	SHAFT, ROCKER	1	1	1	1		
14	2NX-12156-00	SHAFT, ROCKER 2	1	1	1	1		
15	2NX-12166-00	SHAFT, ROCKER 3	1	1	1	1		
16	93210-08521	O-RING	2	2	2	2		
17	90109-063E8	BOLT	2	2	2	2		
18	2NX-12159-00	SCREW, VALVE ADJUSTING	4	4	4	4		
19	90170-06128	NUT	4	4	4	4		
20	90206-12075	WASHER, WAVE	4	4	4	4		

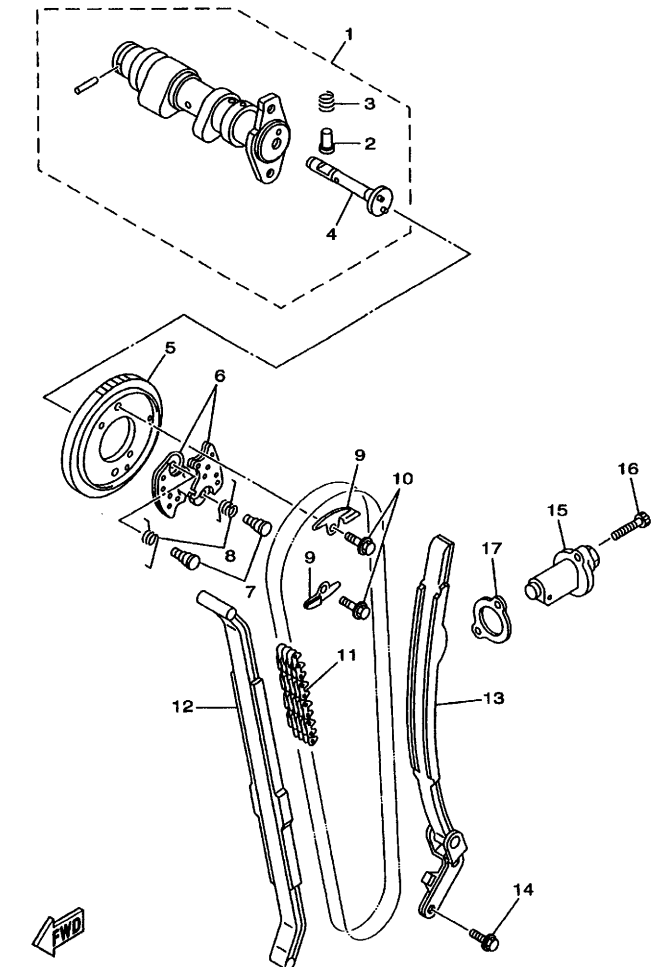

4WV1100-8050

FIG. 5 CAMSHAFT. CHAIN

REF. NO.	PART NO.	DESCRIPTION	5GT6	5GT7	5GT9	5GTA		REMARKS
1	4WV-12170-00	CAMSHAFT ASSY 1	1	1	1	1		
2	3YF-12284-00	.PIN, DECOMPRESSION LEVER	1	1	1	1		
3	90501-051L0	.SPRING, COMPRESSION	1	1	1	1		
4	3YF-12290-00	.LEVER, DECOMPRESSION SPRING	1	1	1	1		
5	3YF-12176-00	SPROCKET, CAM CHAIN	1	1	1	1		
6	4WV-12288-00	CAM, DECOMPRESSION	2	2	2	2		
7	3YF-12247-00	SHAFT, TENSIONER	2	2	2	2		
8	3YF-12216-00	SPRING	2	2	2	2		
9	4WV-12233-00	PLATE, GUIDE STOPPER 1	2	2	2	2		
10	90105-07342	BOLT, WASHER BASED	2	2	2	2		
11	94590-27126	CHAIN	1	1	1	1		
12	34K-12231-00	GUIDE, STOPPER 1	1	1	1	1		
13	34K-12241-00	GUIDE, STOPPER 2	1	1	1	1		
14	90105-060A6	BOLT, WASHER BASED	2	2	2	2		
15	3TB-12210-00	TENSIONER ASSY, CAM CHAIN	1	1	1	1		
16	90110-06225	BOLT, HEXAGON SOCKET HEAD	2	2	2	2		
17	4DW-12213-00	GASKET, TENSIONER CASE	1	1	1	1		

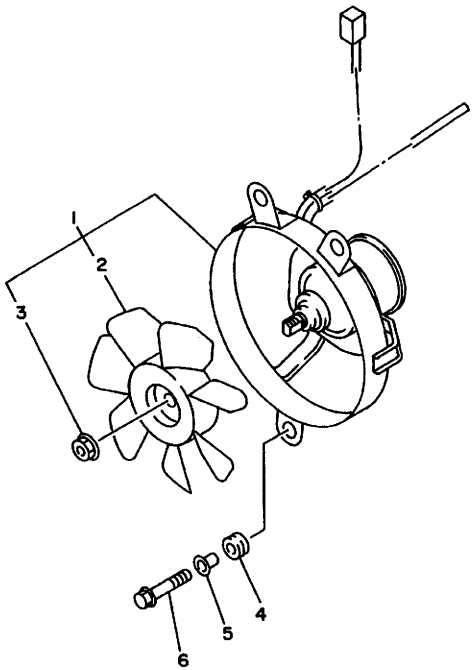

4SH1100-6060

FIG. 6 BLOWER

REF. NO.	PART NO.	DESCRIPTION	5GT6	5GT7	5GT9	5GTA		REMARKS
1	4SH-12405-00	BLOWER ASSY	1	1	1	1		
2	4SH-12611-00	.FAN	1	1	1	1		
3	33M-12671-00	.NUT 1	1	1	1	1		
4	90480-14229	GROMMET	3	3	3	3		
5	90387-063E6	COLLAR	3	3	3	3		
6	95807-06025	BOLT, FLANGE	3	3	3	3		

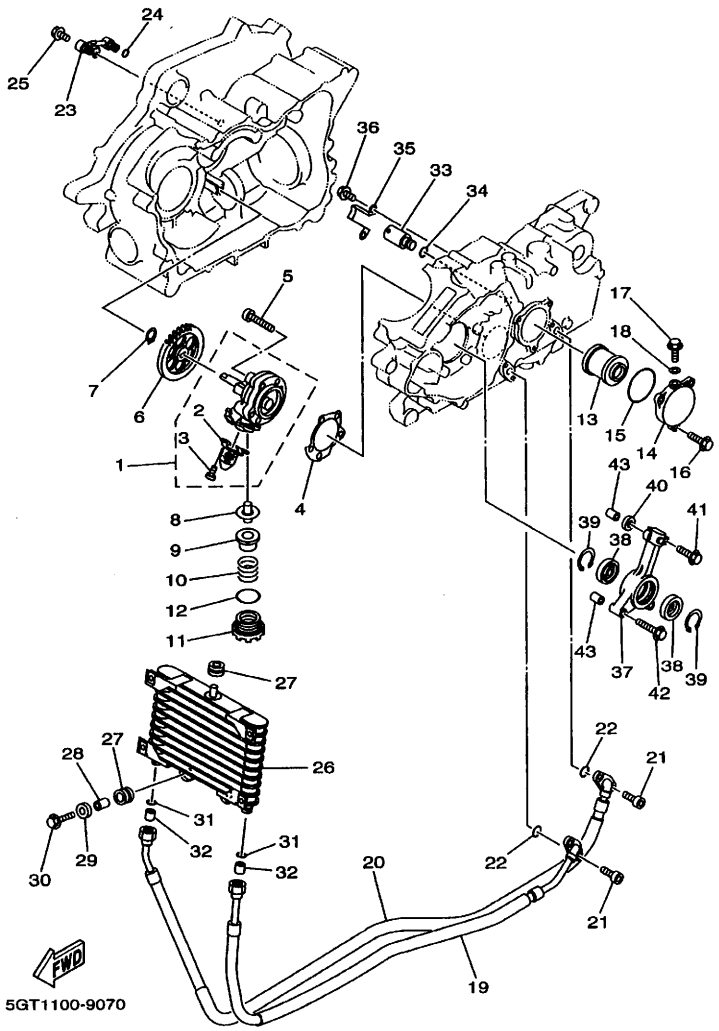

FIG. 7 OIL PUMP

REF. NO.	PART NO.	DESCRIPTION	5GT6	5GT7	5GT9	5GTA		REMARKS
1	5GT-13300-00	OIL PUMP ASSY	1	1	1	1		
2	4WV-13411-00	.STRAINER, OIL	1	1	1	1		
3	98507-06008	.SCREW, PAN HEAD	3	3	3	3		
4	4WV-13329-00	GASKET, PUMP COVER	1	1	1	1		
5	91317-06050	BOLT	3	3	3	3		
6	5GT-13325-00	GEAR, PUMP DRIVEN	1	1	1	1		
7	99009-11400	CIRCLIP	1	1	1	1		
8	4WV-13416-00	PIPE, OIL 1	1	1	1	1		
9	51Y-13411-00	STRAINER, OIL	1	1	1	1		
10	90501-18576	SPRING, COMPRESSION	1	1	1	1		
11	4HC-15351-00	PLUG, DRAIN	1	1	1	1		
12	93210-35520	O-RING	1	1	1	1		
13	4X7-13440-01	ELEMENT ASSY, OIL CLEANER	1	1	1	1		
14	583-13447-01	COVER, OIL ELEMENT	1	1	1	1		
15	93210-64297	O-RING	1	1	1	1		
16	95027-06020	BOLT, FLANGE	3	3	3	3		
17	90149-05110	SCREW	1	1	1	1		
18	90430-05126	GASKET	1	1	1	1		
19	5GT-13464-00	HOSE, OIL 1	1	1	1	1		
20	5GT-13465-00	HOSE, OIL 2	1	1	1	1		
21	91317-06016	BOLT	4	4	4	4		
22	93210-10197	O-RING	2	2	2	2		
23	4WV-13161-00	PIPE, DELIVERY 1	1	1	1	1		
24	93210-06422	O-RING	2	2	2	2		
25	95027-06012	BOLT, FLANGE	1	1	1	1		
26	3HN-13470-00	OIL COOLER ASSY	1	1	1	1		
27	90480-15235	GROMMET	3	3	3	3		

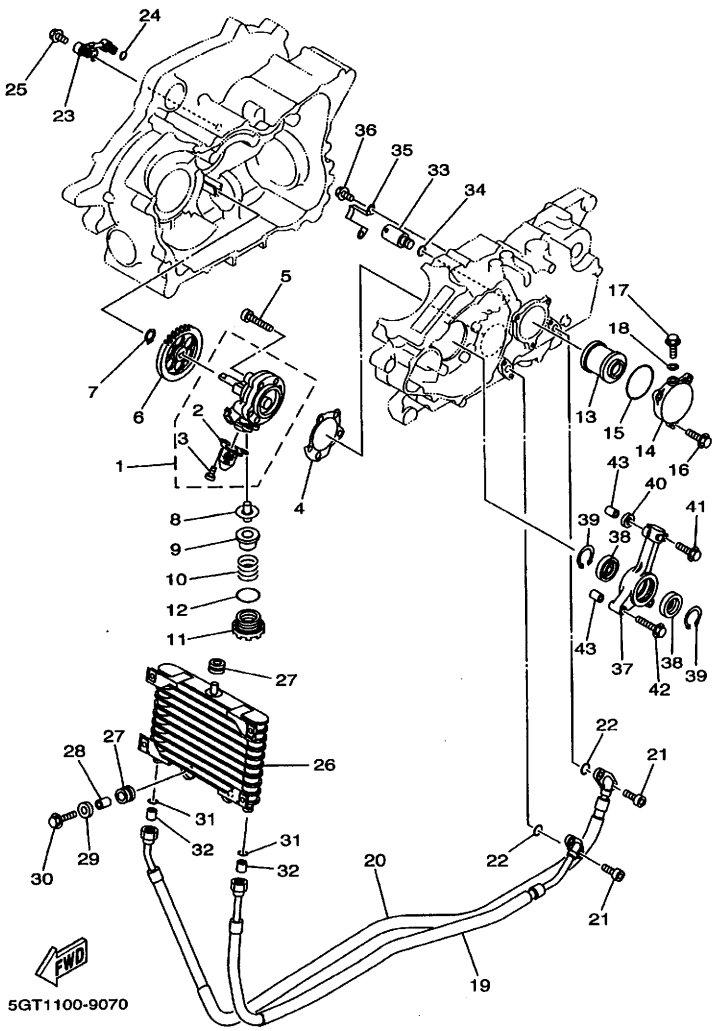

FIG. 7 OIL PUMP

REF. NO.	PART NO.	DESCRIPTION	5GT6	5GT7	5GT9	5GTA		REMARKS
28	90387-0714B	COLLAR	2	2	2	2		
29	90209-06174	WASHER	2	2	2	2		
30	95807-06020	BOLT, FLANGE	2	2	2	2		
31	93210-12152	O-RING	2	2	2	2		
32	93612-16254	PIN, DOWEL	2	2	2	2		
33	25G-13490-00	RELIEF VALVE ASSY	1	1	1	1		
34	93210-10096	O-RING	1	1	1	1		
35	4WV-1319K-00	PLATE	1	1	1	1		
36	95027-06012	BOLT, FLANGE	1	1	1	1		
37	4WV-13446-00	CONNECTOR	1	1	1	1		
38	93101-30171	OIL SEAL	2	2	2	2		
39	93450-42138	CIRCLIP	2	2	2	2		
40	90430-08178	GASKET	1	1	1	1		
41	95027-06025	BOLT, FLANGE	2	2	2	2		
42	95027-06040	BOLT, FLANGE	1	1	1	1		
43	99530-08016	PIN, DOWEL	2	2	2	2		

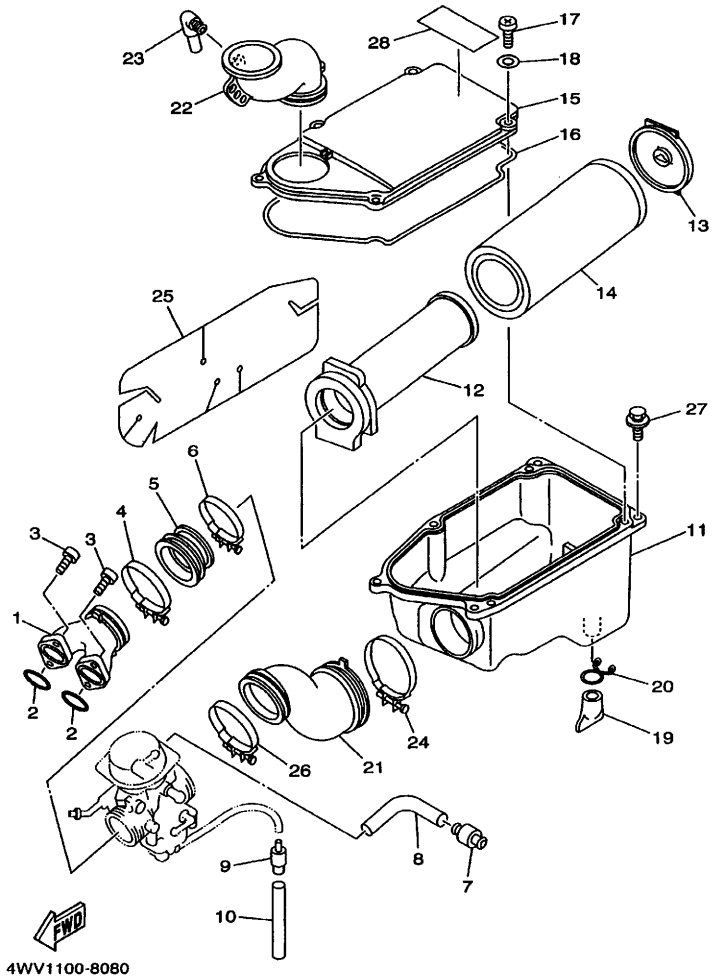

FIG. 8 INTAKE

REF. NO.	PART NO.	DESCRIPTION	5GT6	5GT7	5GT9	5GTA		REMARKS
1	4WV-13586-00	JOINT, CARBURETOR 1	1	1	1	1		
2	93210-36769	O-RING	2	2	2	2		
3	91317-06020	BOLT	4	4	4	4		
4	90450-63088	HOSE CLAMP ASSY	1	1	1	1		
5	4WV-13596-00	JOINT, CARBURETOR 2	1	1	1	1		
6	90450-57044	HOSE CLAMP ASSY	1	1	1	1		
7	4X7-14467-01	SEAL	1	1	1	1		
8	4WV-14349-00	PIPE	1	1	1	1		
9	24W-14193-00	PIPE	1	1	1	1		
10	91A20-07010	TUBE, FLEXIBLE VINYL	1	1	1	1		
11	1UY-14411-01	CASE, AIR CLEANER 1	1	1	1	1		
12	1UY-14458-01	GUIDE	1	1	1	1		
13	1UY-14468-00	PLATE,ELEMENT FITTING	1	1	1	1		
14	1UY-14451-00	ELEMENT, AIR CLEANER	1	1	1	1		
15	1UY-14412-01	CAP, CLEANER CASE 1	1	1	1	1		
16	10M-14457-00	SEAL	1	1	1	1		
17	98507-05016	SCREW, PAN HEAD	5	5	5	5		
18	92907-05600	WASHER, PLATE	5	5	5	5		
19	59V-14457-00	SEAL	1	1	1	1		
20	90467-22080	CLIP	1	1	1	1		
21	4WV-14453-00	JOINT, AIR CLEANER 1	1	1	1	1		
22	4WV-14437-00	DUCT	1	1	1	1		
23	31A-14419-00	PIPE	1	1	1	1		
24	90460-75020	CLAMP, HOSE	1	1	1	1		
25	4WV-1442F-01	PROTECTOR	1	1	1	1		
26	90460-64065	CLAMP, HOSE	1	1	1	1		
27	90119-06063	BOLT, WITH WASHER	3	3	3	3		

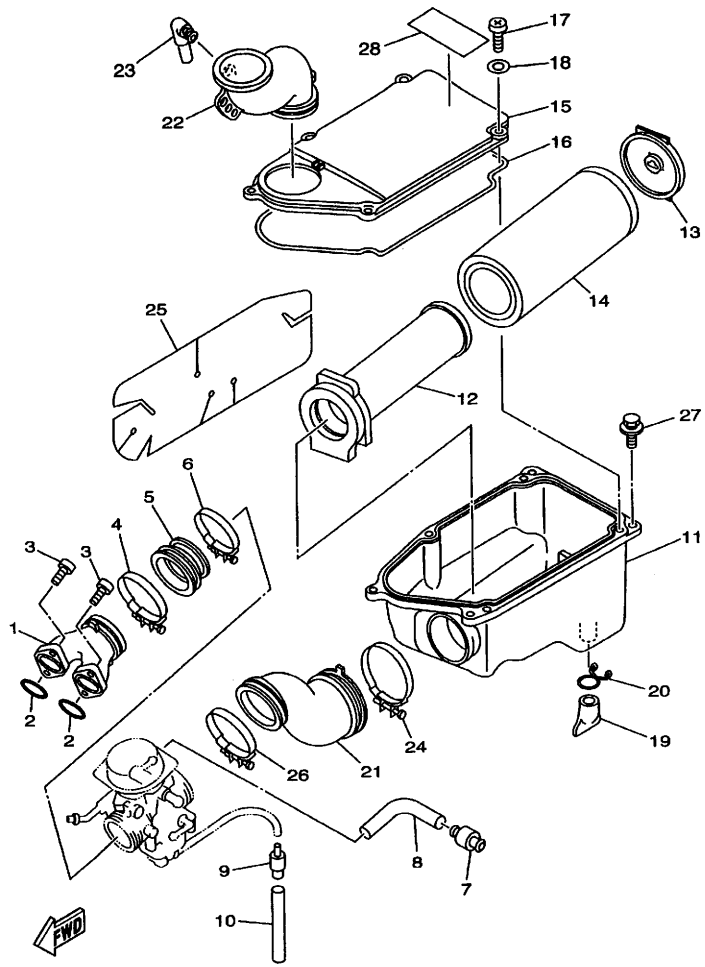

4WV1100-8080

FIG. 8 INTAKE

REF. NO.	PART NO.	DESCRIPTION	5GT6	5GT7	5GT9	5GTA		REMARKS
28	5GT-2179T-00	PLATE, EPA 3(CALIFORNIA)		1		1		

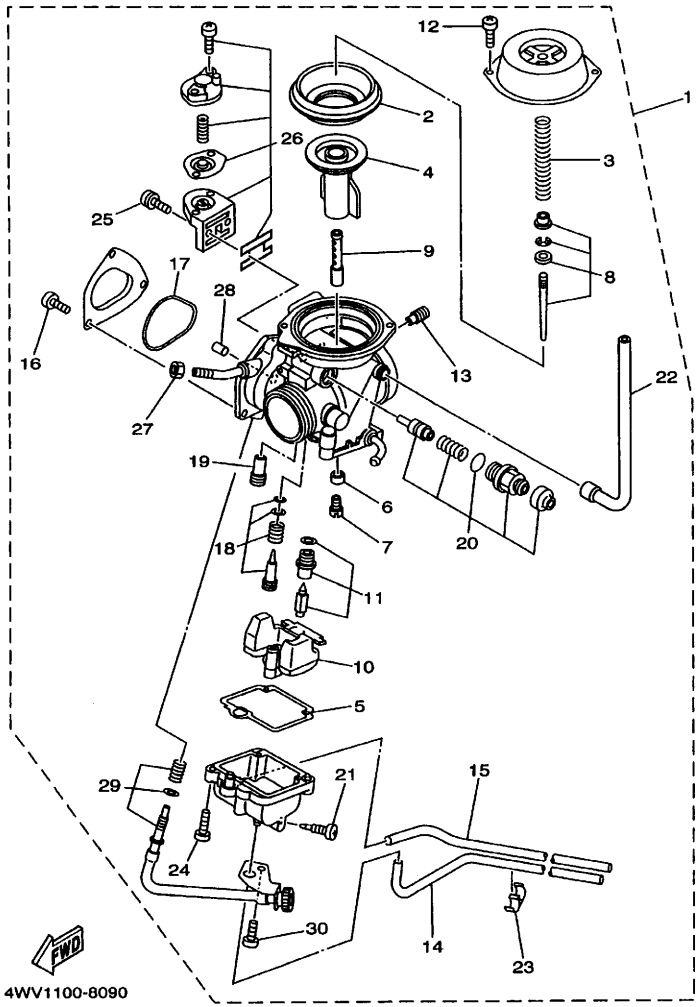

FIG. 9 CARBURETOR

REF. NO.	PART NO.	DESCRIPTION	5GT6	5GT7	5GT9	5GTA		REMARKS
1	4WV-14901-00	CARBURETOR ASSY 1	1		1			
	4WV-14901-10	CARBURETOR ASSY 1		1		1		
2	4WV-24411-00	.DIAPHRAGM	1	1	1	1		
3	4WV-14933-00	.SPRING, DIAPHRAGM	1	1	1	1		
4	4WV-14272-00	.VALVE	1	1	1	1		
5	4WV-14147-20	.O-RING	1	1	1	1		
6	4WV-14918-00	.RING	1	1	1	1		
7	620-14231-29	.JET, MAIN (#145)	1		1			
	620-1423E-57	.JET, MAIN (#143.8)		1		1		
8	4WV-1490J-00	.NEEDLE SET	1		1			
	4WV-1490J-10	.NEEDLE SET		1		1		
9	4WV-14941-90	.NOZZLE, MAIN	1	1	1	1		
10	4WV-14985-00	.FLOAT	1	1	1	1		
11	4WV-14190-28	.NEEDLE VALVE ASSY	1	1	1	1		
12	98502-05008	.SCREW, PAN HEAD	2	2	2	2		
13	239-14172-07	.PILOT JET, AIR (0.7)	1	1	1	1		
14	4WV-14996-00	.PIPE	1	1	1	1		
15	4WV-14193-00	.PIPE	1	1	1	1		
16	98502-04006	.SCREW, PAN HEAD	3	3	3	3		
17	4WV-14147-10	.O-RING	1	1	1	1		
18	4WV-14105-01	.PILOT SCREW SET	1	1	1	1		
19	4HR-14142-42	.JET, PILOT (# 42.5)	1	1	1	1		
20	4WV-1410A-00	.STARTER SET	1	1	1	1		
21	12R-14191-00	.PLUG, DRAIN	1	1	1	1		
22	4WV-14197-00	.PIPE	1	1	1	1		
23	87M-14137-00	.CLIP	1	1	1	1		
24	98502-05014	.SCREW, PAN HEAD	2	2	2	2		

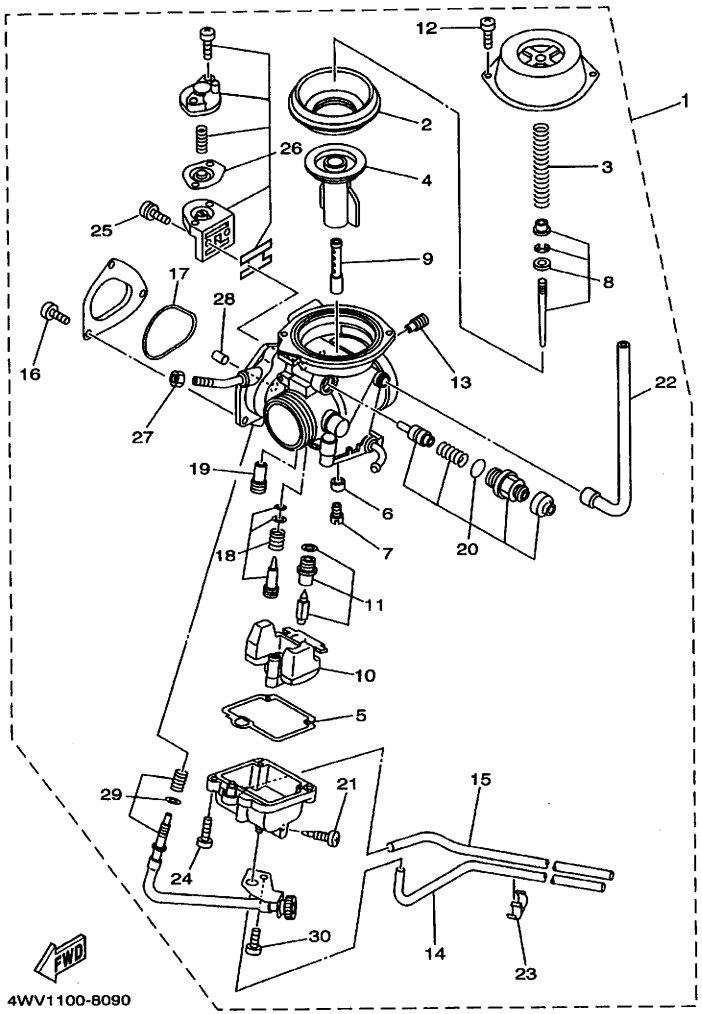

FIG. 9 CARBURETOR

REF. NO.	PART NO.	DESCRIPTION	5GT6	5GT7	5GT9	5GTA		REMARKS
25	97602-04112	.SCREW, PAN HEAD WITH WASHER	2	2	2	2		
26	4WV-14940-00	.DIAPHRAGM ASSY	1	1	1	1		
27	522-14161-00	.NUT, CABLE ADJUSTING	1	1	1	1		
28	1UY-14155-00	.GUIDE, CABLE	1	1	1	1		
29	4WV-14103-00	.THROTTLE SCREW SET	1	1	1	1		
30	98502-05010	.SCREW, PAN HEAD	1	1	1	1		

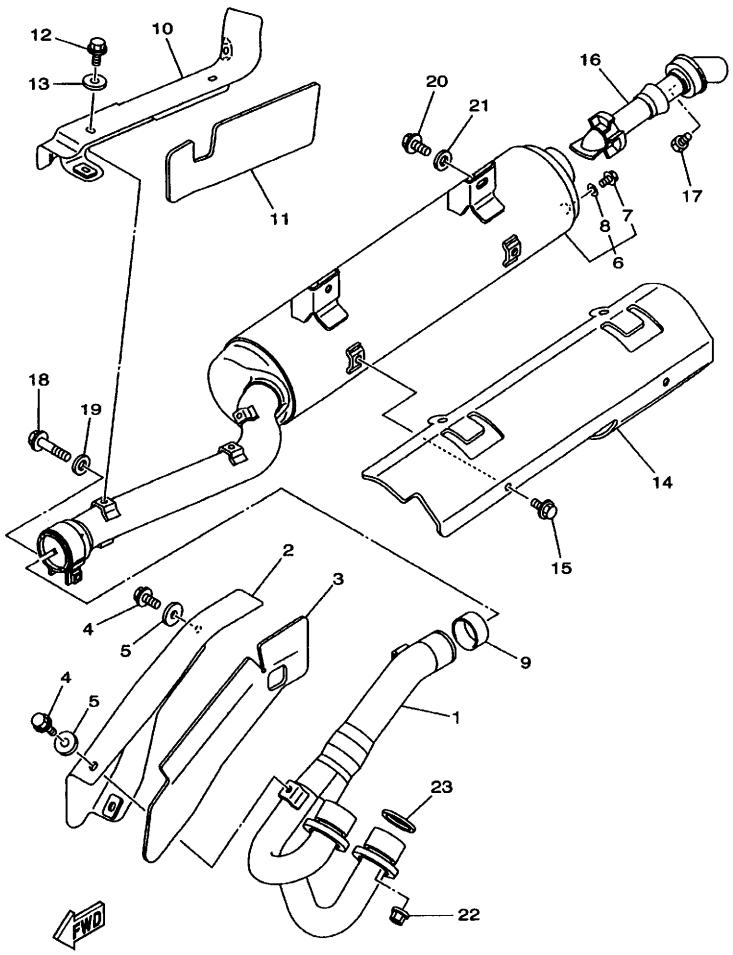

5GT1100-9100

FIG. 10 EXHAUST

REF. NO.	PART NO.	DESCRIPTION	5GT6	5GT7	5GT9	5GTA		REMARKS
1	5GT-14611-00	PIPE, EXHAUST 1	1	1	1	1		
2	4WV-14628-00	PROTECTOR, EXHAUST PIPE	1	1	1	1		
3	4WV-1465R-01	PLATE, PROTECTOR	1	1	1	1		
4	95817-06010	BOLT, FLANGE	3	3	3	3		
5	90201-06071	WASHER, PLATE	3	3	3	3		
6	5GT-14711-00	MUFFLER 1	1	1	1	1		
7	95885-10014	.BOLT, FLANGE	1	1	1	1		
8	92990-10600	.WASHER, PLATE	1	1	1	1		
9	3YF-14755-00	GASKET, SILENCER	1	1	1	1		
10	4WV-14728-01	PROTECTOR, MUFFLER 2	1	1	1	1		
11	4WV-1465T-01	PLATE, PROTECTOR	1	1	1	1		
12	95817-06010	BOLT, FLANGE	3	3	3	3		
13	90201-06071	WASHER, PLATE	3	3	3	3		
14	5GT-14718-00	PROTECTOR, MUFFLER 1	1	1	1	1		
15	95817-06010	BOLT, FLANGE	3	3	3	3		
16	4WV-14752-00	PIPE, OUTLET	1	1	1	1		
17	97007-06008	BOLT	1	1	1	1		
18	95817-08045	BOLT, FLANGE	1	1	1	1		
19	90201-086J0	WASHER, PLATE	1	1	1	1		
20	95817-08020	BOLT, FLANGE	2	2	2	2		
21	90201-08326	WASHER, PLATE	2	2	2	2		
22	90179-06668	NUT	4	4	4	4		
23	3YF-14613-01	GASKET, EXHAUST PIPE	2	2	2	2		

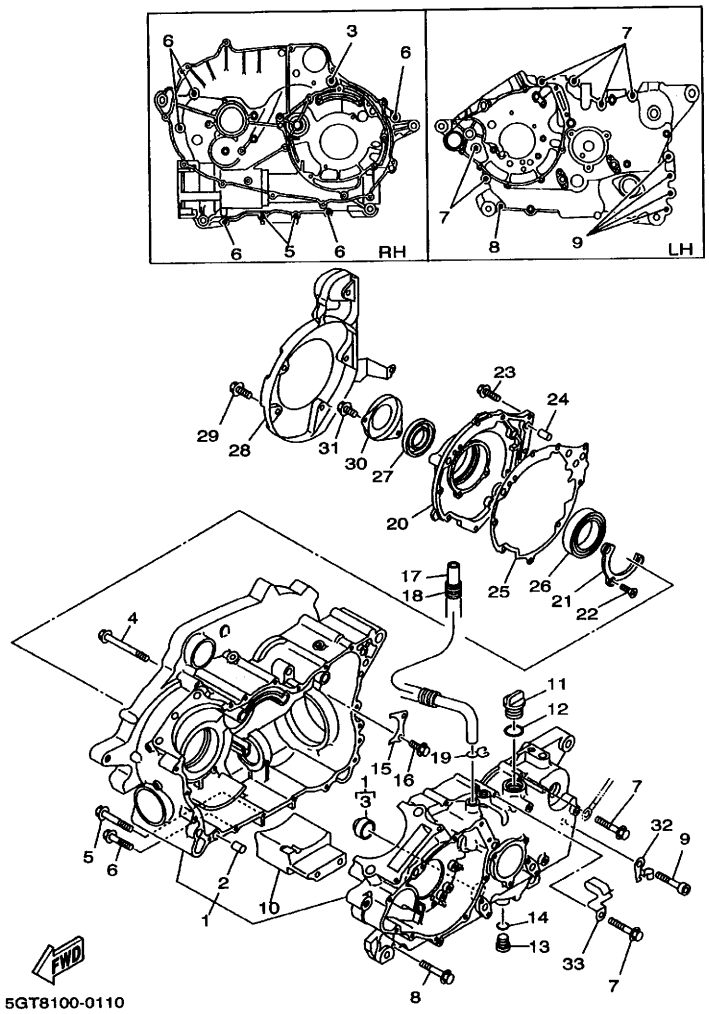

FIG. 11 CRANKCASE

REF. NO.	PART NO.	DESCRIPTION	5GT6	5GT7	5GT9	5GTA		REMARKS
1	4WV-15100-12	CRANKCASE ASSY	1	1	1	1		
2	99530-10014	.PIN, DOWEL	2	2	2	2		
3	2H7-15361-00	.GAUGE, LEVEL	1	1	1	1		
4	95027-06090	BOLT, FLANGE	1	1	1	1		
5	95027-06060	BOLT, FLANGE	2	2	2	2		
6	95027-06040	BOLT, FLANGE	5	5	5	5		
7	95027-06055	BOLT, FLANGE	6	6	6	6		
8	95027-06035	BOLT, FLANGE	1	1	1	1		
9	91317-08050	BOLT	4	4	4	4		
10	4WV-15327-00	SPACER, ENGINE MOUNT	1	1	1	1		
11	3F9-15362-00	PLUG, OIL LEVEL	1	1	1	1		
12	93210-27370	O-RING	1	1	1	1		
13	90340-14046	PLUG, STRAIGHT SCREW	1	1	1	1		
14	214-11198-01	GASKET	1	1	1	1		
15	4WV-15388-00	PLATE, BEARING COVER	1	1	1	1		
16	95027-06012	BOLT, FLANGE	2	2	2	2		
17	4WV-11166-00	PIPE, BREATHER 1	1	1	1	1		
18	4WV-24327-00	PROTECTOR, PIPE	1	1	1	1		
19	90467-14015	CLIP	1	1	1	1		
20	4WV-15163-00	HOUSING, BEARING 1	1	1	1	1		
21	5GT-15383-00	PLATE, BEARING COVER	1	1	1	1		
22	98707-06010	SCREW, FLAT HEAD	2	2	2	2		
23	95027-06020	BOLT, FLANGE	9	9	9	9		
24	99530-10014	PIN, DOWEL	2	2	2	2		
25	4WV-15463-00	GASKET 2	1	1	1	1		
26	93306-01002	BEARING	1	1	1	1		
27	93102-35463	OIL SEAL	1	1	1	1		

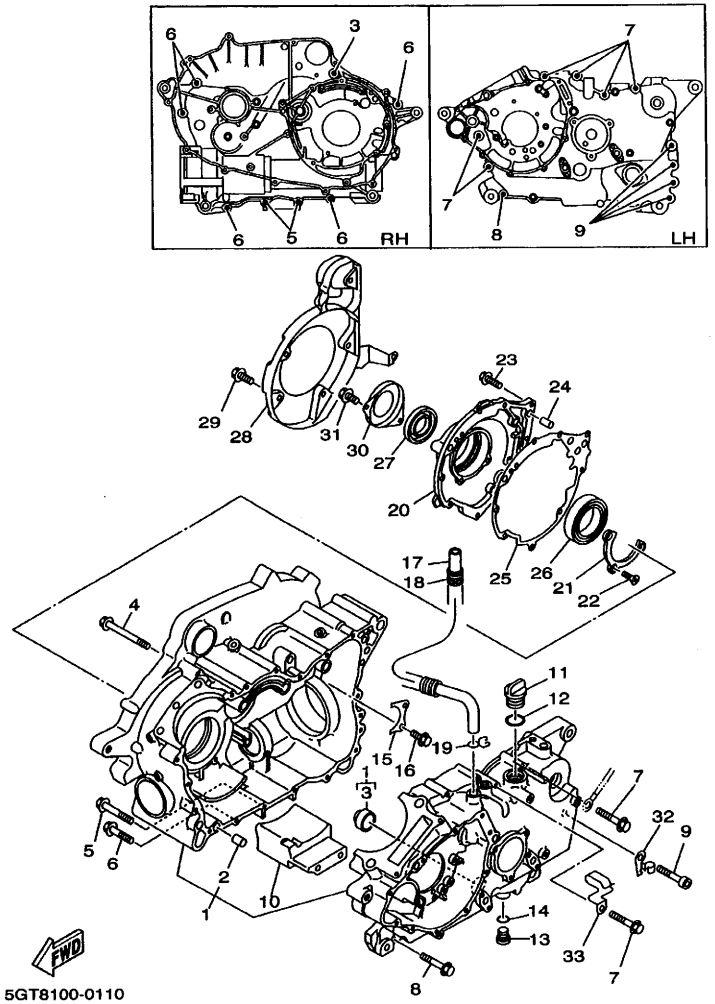

FIG. 11 CRANKCASE

REF. NO.	PART NO.	DESCRIPTION	5GT6	5GT7	5GT9	5GTA		REMARKS
28	4WV-15333-00	COVER	1	1	1	1		
29	95027-06012	BOLT, FLANGE	6	6	6	6		
30	5GT-15191-00	PLATE	1	1	1	1		
31	95027-06012	BOLT, FLANGE	2	2	2	2		
32	90465-10090	CLAMP	1	1	1	1		
33	90465-08389	CLAMP	1	1	1	1		

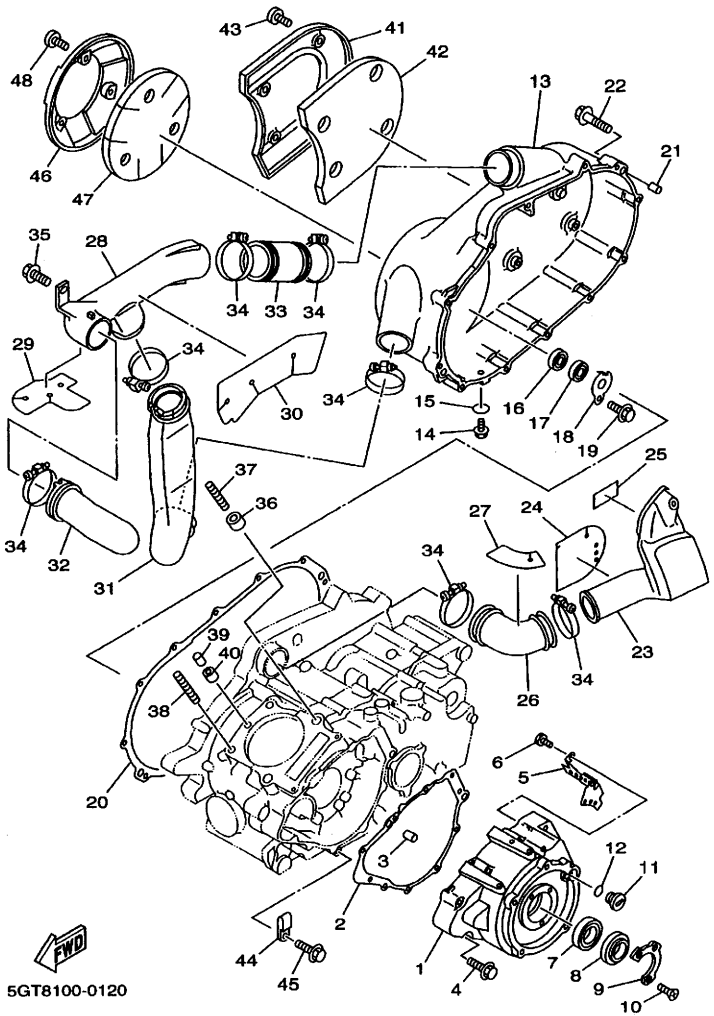

FIG. 12 CRANKCASE COVER 1

REF. NO.	PART NO.	DESCRIPTION	5GT6	5GT7	5GT9	5GTA		REMARKS
1	4WV-15411-00	COVER, CRANKCASE 1	1	1	1	1		
2	4WV-15451-00	GASKET, CRANKCASE COVER 1	1	1	1	1		
3	99530-10014	PIN, DOWEL	2	2	2	2		
4	95027-06045	BOLT, FLANGE	10	10	10	10		
5	4WV-15113-00	PLATE	1	1	1	1		
6	91317-06012	BOLT	2	2	2	2		
7	93306-07801	BEARING	1	1	1	1		
8	93102-28476	OIL SEAL	1	1	1	1		
9	1UY-15719-00	WASHER, THRUST	1	1	1	1		
10	90151-05023	SCREW, COUNTERSUNK	3	3	3	3		
11	90340-14117	PLUG, STRAIGHT SCREW	1	1	1	1		
12	93210-14369	O-RING	1	1	1	1		
13	4WV-15431-02	COVER, CRANKCASE 3	1	1	1	1		
14	95827-08012	BOLT, FLANGE	1	1	1	1		
15	90430-08119	GASKET	1	1	1	1		
16	93306-20120	BEARING	1	1	1	1		
17	93101-12168	OIL SEAL	1	1	1	1		
18	4WV-15381-00	PLATE, BEARING COVER	1	1	1	1		
19	95027-06012	BOLT, FLANGE	1	1	1	1		
20	4WV-15462-00	GASKET, CRANKCASE COVER 3	1	1	1	1		
21	99530-10014	PIN, DOWEL	2	2	2	2		
22	95027-06040	BOLT, FLANGE	12	12	12	12		
23	4WV-15471-00	DUCT, AIR	1	1	1	1		
24	4WV-15496-00	SEAL, PROTECTOR 2	1	1	1	1		
25	4WV-15335-00	DAMPER 3	1	1	1	1		
26	4WV-15474-00	SEAL, AIR DUCT	1	1	1	1		
27	4WV-15495-00	SEAL, PROTECTOR 1	1	1	1	1		

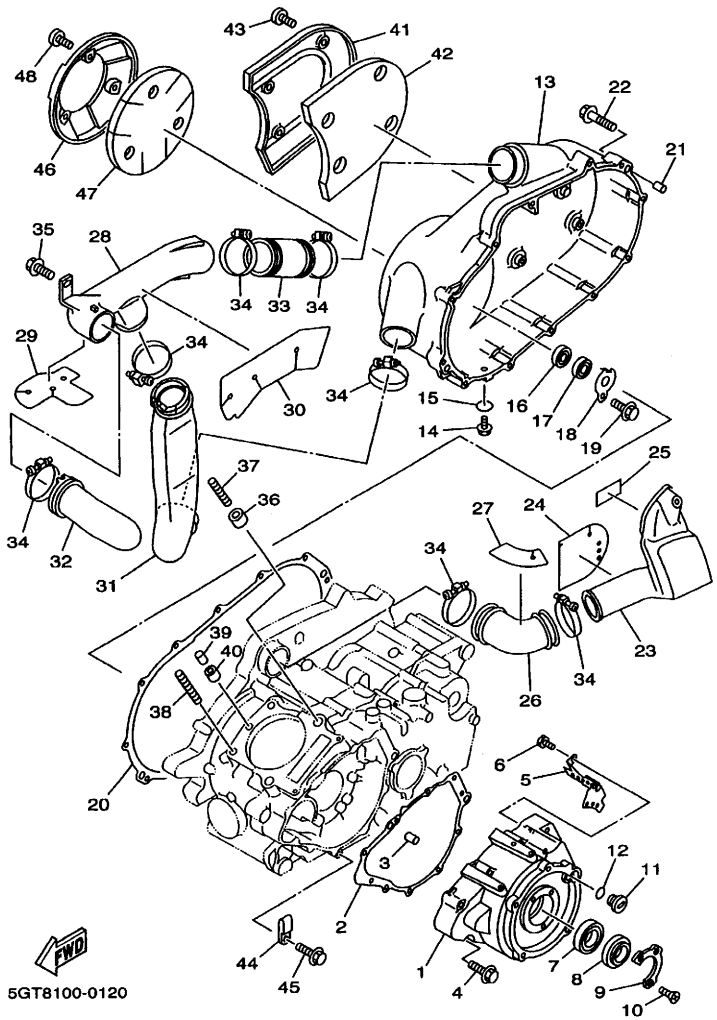

FIG. 12 CRANKCASE COVER 1

REF. NO.	PART NO.	DESCRIPTION	5GT6	5GT7	5GT9	5GTA		REMARKS
28	4WV-15473-01	DUCT, AIR	1	1	1	1		
29	4WV-15494-01	SEAL, PROTECTOR	1	1	1	1		
30	4WV-15498-01	TAPE, DAMPER	1	1	1	1		
31	4WV-15475-02	DUCT, AIR	1	1	1	1		
32	5GT-15477-00	DUCT, AIR	1	1	1	1		
33	4WV-15472-00	SEAL, AIR DUCT	1	1	1	1		
34	90450-64089	HOSE CLAMP ASSY	7	7	7	7		
35	95807-06014	BOLT, FLANGE	1	1	1	1		
36	99530-14016	PIN, DOWEL	2	2	2	2		
37	90116-10506	BOLT, STUD	2	2	2	2		
38	90116-10263	BOLT, STUD	2	2	2	2		
39	99530-08016	PIN, DOWEL	1	1	1	1		
40	90430-08178	GASKET	1	1	1	1		
41	4WV-15499-00	PROTECTOR, COVER	1	1	1	1		
42	4WV-15326-00	DAMPER, ENGINE MOUNT 2	1	1	1	1		
43	98907-06014	SCREW, BIND	4	4	4	4		
44	90461-08113	CLAMP	1	1	1	1		
45	95027-06012	BOLT, FLANGE	1	1	1	1		
46	4WV-15491-00	PROTECTOR	1	1	1	1		
47	4WV-15316-00	DAMPER, ENGINE MOUNT 1	1	1	1	1		
48	98907-06014	SCREW, BIND	3	3	3	3		

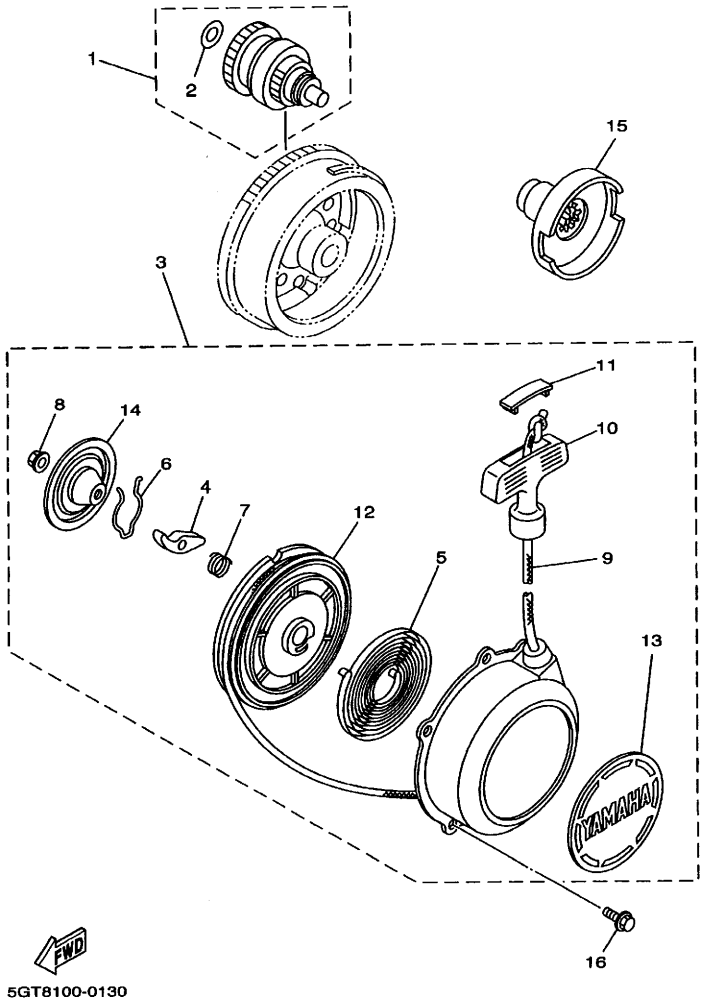

FIG. 13 STARTER

REF. NO.	PART NO.	DESCRIPTION	5GT6	5GT7	5GT9	5GTA		REMARKS
1	4WV-15650-02	IDLE GEAR ASSY	1	1	1	1		
2	90201-125L6	.WASHER, PLATE	1	1	1	1		
3	5GT-15710-00	STARTER ASSY	1	1	1	1		
4	21V-15741-00	.PAWL, DRIVE	1	1	1	1		
5	21V-15713-00	.SPRING, STARTER	1	1	1	1		
6	21V-15715-00	.SPRING, FRICTION	1	1	1	1		
7	21V-15767-00	.SPRING	1	1	1	1		
8	95702-06500	.NUT, FLANGE	1	1	1	1		
9	21V-15751-00	.WIRE, STARTER	1	1	1	1		
10	3X3-15755-00	.HANDLE, STARTER	1	1	1	1		
11	21V-15779-00	.COVER	1	1	1	1		
12	24W-15714-00	.DRUM, SHEAVE	1	1	1	1		
13	5GH-15443-00	.EMBLEM	1	1	1	1		
14	1UY-15716-00	.PLATE, DRIVE	1	1	1	1		
15	1UY-15723-00	PULLEY, STARTER	1	1	1	1		
16	90105-06553	BOLT, WASHER BASED	4	4	4	4		

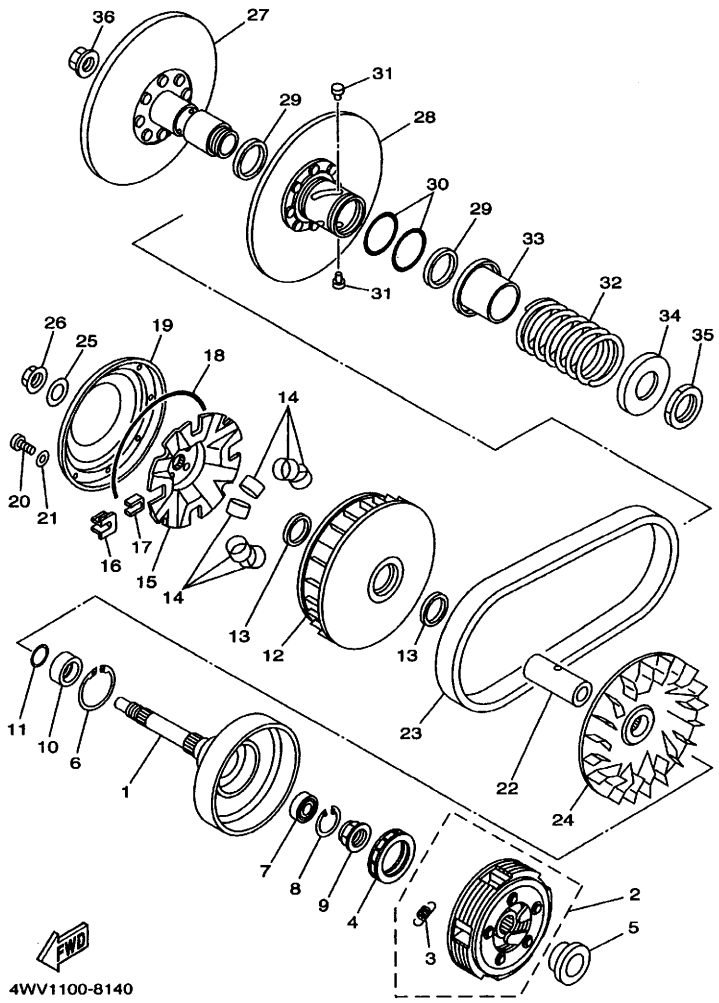

FIG. 14 CLUTCH

REF. NO.	PART NO.	DESCRIPTION	5GT6	5GT7	5GT9	5GTA		REMARKS
1	5GT-16611-00	CLUTCH HOUSING COMP.	1	1	1	1		
2	5GT-16620-00	CLUTCH CARRIER ASSY	1	1	1	1		
3	4WV-16626-00	.SPRING, CLUTCH WEIGHT 1	5	5	5	5		
4	4SH-16664-00	BEARING, ONE WAY	1	1	1	1		
5	90387-2611Y	COLLAR	1	1	1	1		
6	93410-46079	CIRCLIP	1	1	1	1		
7	93306-20228	BEARING	1	1	1	1		
8	99009-35500	CIRCLIP	1	1	1	1		
9	90179-22640	NUT	1	1	1	1		
10	90387-2508C	COLLAR	1	1	1	1		
11	93210-25755	O-RING	1	1	1	1		
12	4WV-17620-10	PRIMARY SLIDING SHEAVE COMP.	1	1	1	1		
13	93101-31167	OIL SEAL	2	2	2	2		
14	4WV-17632-00	WEIGHT	8	8	8	8		
15	4WV-17623-00	CAM	1	1	1	1		
16	4WV-17653-00	SLIDER	4	4	4	4		
17	4WV-17654-01	SPACER 1	4	4	4	4		
18	93211-594A4	O-RING	1	1	1	1		
19	4WV-17639-10	STOPPER	1	1	1	1		
20	90157-04088	SCREW, PAN HEAD	8	8	8	8		
21	90201-047R9	WASHER, PLATE	8	8	8	8		
22	90387-1910N	COLLAR	1	1	1	1		
23	4WV-17641-00	V-BELT	1	1	1	1		
24	4WV-17611-00	SHEAVE, PRIMARY FIXED	1	1	1	1		
25	90201-190T7	WASHER, PLATE	1	1	1	1		
26	90179-16690	NUT	1	1	1	1		
27	4WV-17660-10	SECONDARY FIXED SHEAVE COMP.	1	1	1	1		

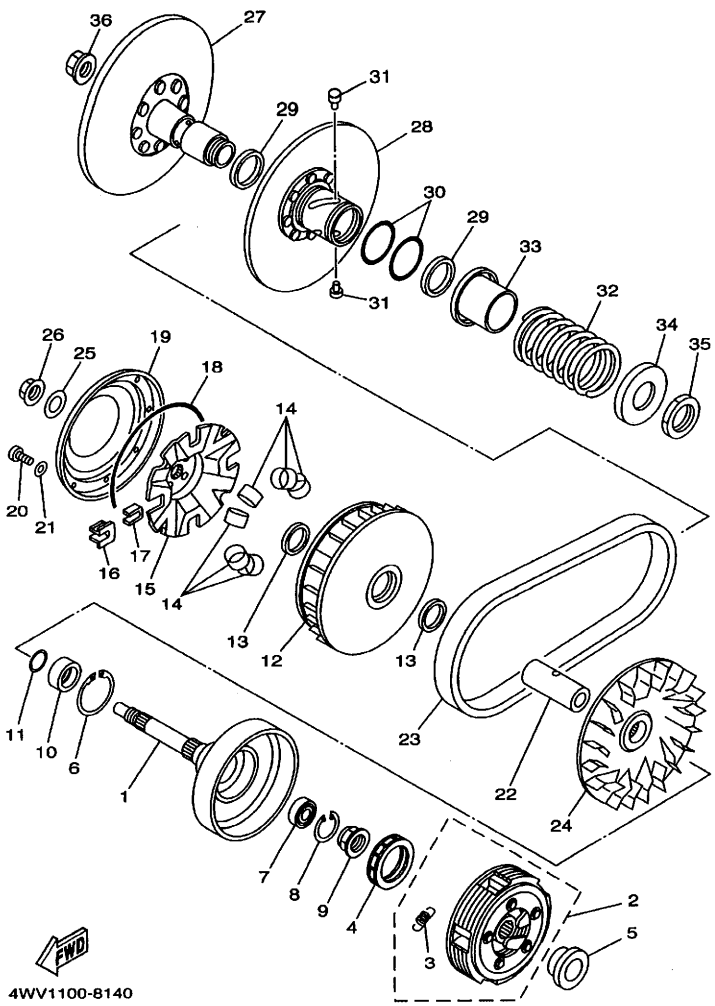

FIG. 14 CLUTCH

REF. NO.	PART NO.	DESCRIPTION	5GT6	5GT7	5GT9	5GTA		REMARKS
28	4WV-17670-00	SECONDARY SLIDING SHEAVE	1	1	1	1		
29	93104-41119	OIL SEAL	2	2	2	2		
30	93210-44545	O-RING	2	2	2	2		
31	4CW-17664-00	PIN, GUIDE	4	4	4	4		
32	90501-623L6	SPRING, COMPRESSION	1	1	1	1		
33	4WV-17684-00	SEAT, SECONDARY SPRING	1	1	1	1		
34	4WV-17644-00	SEAT,SPRING	1	1	1	1		
35	90170-36279	NUT	1	1	1	1		
36	90179-16690	NUT	1	1	1	1		

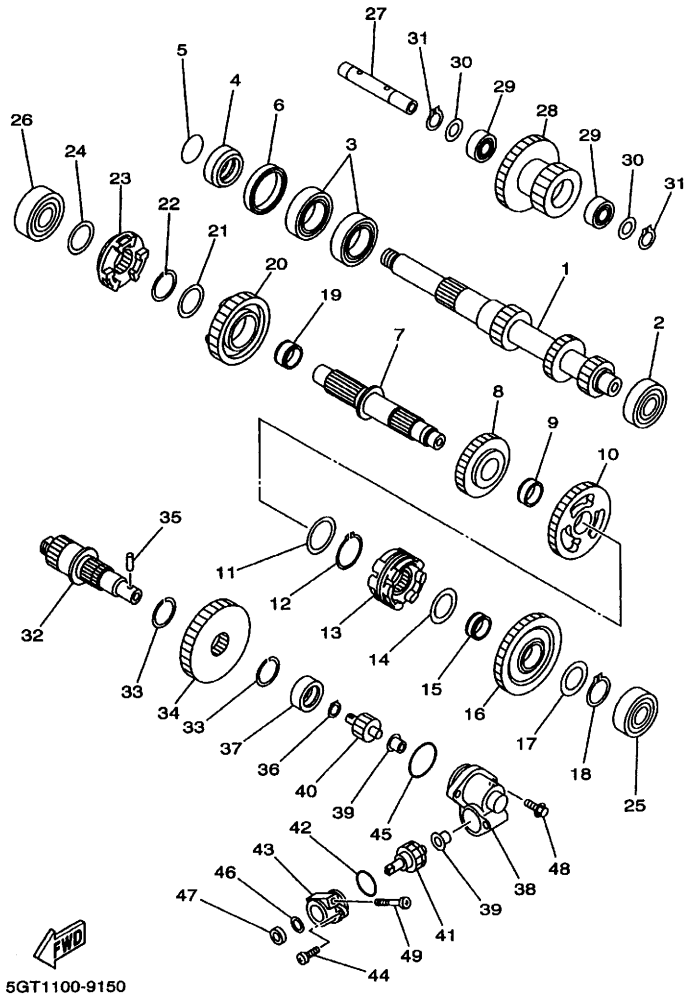

FIG. 15 TRANSMISSION

REF. NO.	PART NO.	DESCRIPTION	5GT6	5GT7	5GT9	5GTA		REMARKS
1	5GT-17681-00	SHAFT, SECONDARY	1	1	1	1		
2	93306-20434	BEARING (B6204)	1	1	1	1		
3	93306-00612	BEARING	2	2	2	2		
4	90387-2611X	COLLAR	1	1	1	1		
5	93210-26741	O-RING	1	1	1	1		
6	93102-42322	OIL SEAL	1	1	1	1		
7	5GT-17421-00	AXLE, DRIVE	1	1	1	1		
8	5GT-17582-00	GEAR, MIDDLE DRIVE (25 T)	1	1	1	1		
9	93310-32590	BEARING	1	1	1	1		
10	5GT-17223-00	GERA, HIGH WHEEL (30 T)	1	1	1	1		
11	90201-250R9	WASHER, PLATE	1	1	1	1		
12	93440-25084	CIRCLIP	1	1	1	1		
13	5GT-17285-00	CLUTCH, DOG	1	1	1	1		
14	90201-20278	WASHER, PLATE	1	1	1	1		
15	93310-420F2	BEARING	1	1	1	1		
16	5GT-17233-00	GEAR, LOW WHEEL (38 T)	1	1	1	1		
17	90201-20278	WASHER, PLATE	1	1	1	1		
18	93410-20038	CIRCLIP	1	1	1	1		
19	93310-32590	BEARING	1	1	1	1		
20	5GT-17253-00	GEAR, REVERSE WHEEL 2 (27 T)	1	1	1	1		
21	90201-250R9	WASHER, PLATE	1	1	1	1		
22	93440-25084	CIRCLIP	1	1	1	1		
23	5GT-17286-00	HOLDER	1	1	1	1		
24	90201-20278	WASHER, PLATE	1	1	1	1		
25	93306-30209	BEARING	1	1	1	1		
26	93306-30441	BEARING	1	1	1	1		
27	4WV-17432-00	AXLE, IDLE	1	1	1	1		

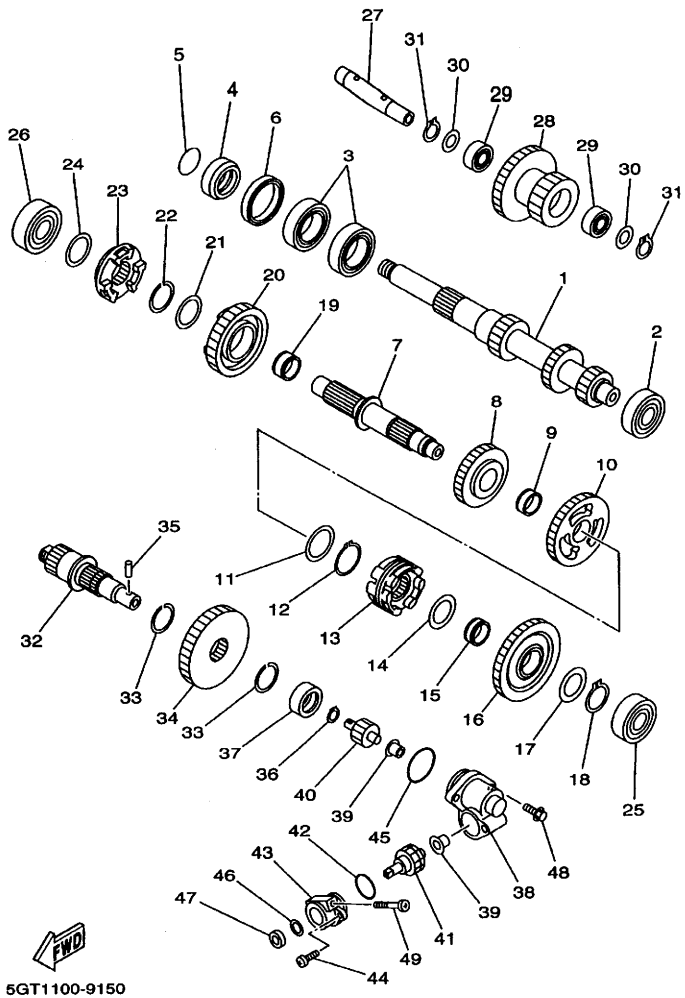

5GT1100-9150

FIG. 15 TRANSMISSION

REF. NO.	PART NO.	DESCRIPTION	5GT6	5GT7	5GT9	5GTA		REMARKS
28	4WV-17243-00	GEAR, REVERSE WHEEL 1	1	1	1	1		
29	93311-51554	BEARING	2	2	2	2		
30	90201-150U6	WASHER, PLATE	2	2	2	2		
31	99009-15400	CIRCLIP	2	2	2	2		
32	5GT-17523-00	SHAFT	1	1	1	1		
33	93440-25084	CIRCLIP	2	2	2	2		
34	5GT-17583-00	GEAR, MIDDLE DRIVEN (34 T)	1	1	1	1		
35	93603-14240	PIN, DOWEL	1	1	1	1		
36	93440-14155	CIRCLIP	1	1	1	1		
37	93311-42077	BEARING	1	1	1	1		
38	4WV-17811-00	HOUSING, TACHOMETER GEAR	1	1	1	1		
39	90381-08002	BUSH, SOLID	2	2	2	2		
40	4WV-17831-00	GEAR, DRIVE	1	1	1	1		
41	4WV-17841-00	GEAR, DRIVEN	1	1	1	1		
42	93210-24253	O-RING	1	1	1	1		
43	59V-17811-00	HOUSING, TACHOMETER GEAR	1	1	1	1		
44	98507-06016	SCREW, PAN HEAD	1	1	1	1		
45	93210-32172	O-RING	1	1	1	1		
46	90201-12163	WASHER, PLATE	1	1	1	1		
47	93102-08307	OIL SEAL	1	1	1	1		
48	95027-06020	BOLT, FLANGE	2	2	2	2		
49	98507-06030	SCREW, PAN HEAD	1	1	1	1		

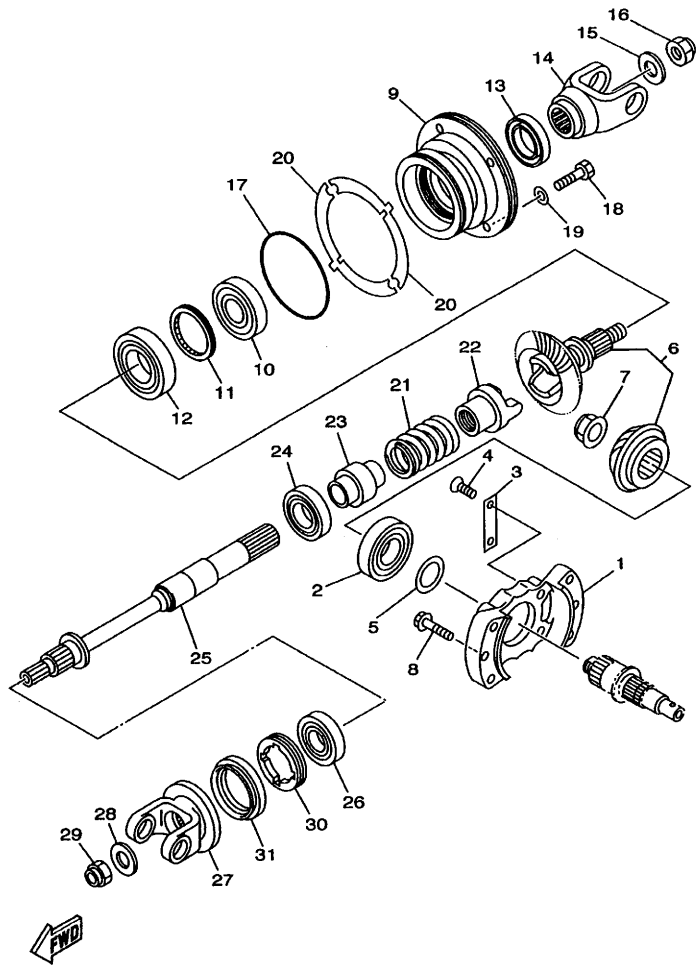

5GT1100-9160

FIG. 16 MIDDLE DRIVE GEAR

REF. NO.	PART NO.	DESCRIPTION	5GT6	5GT7	5GT9	5GTA		REMARKS
1	4WV-17521-01	HOUSING, BEARING	1	1	1	1		
2	93306-20622	BEARING	1	1	1	1		
3	11H-15383-01	PLATE, BEARING COVER	2	2	2	2		
4	90149-08152	SCREW	4	4	4	4		
5	52G-17531-01	SHIM, PINION (0.1T)	1	1	1	1		UR
	52G-17531-11	SHIM, PINION (0.15T)	1	1	1	1		UR
	52G-17531-21	SHIM, PINION (0.2T)	1	1	1	1		UR
	52G-17531-31	SHIM, PINION (0.3T)	1	1	1	1		UR
	52G-17531-41	SHIM, PINION (0.4T)	1	1	1	1		UR
	52G-17531-51	SHIM, PINION (0.5T)	1	1	1	1		UR
6	5GT-Y1754-00	MIDDLE GEAR COMP.	1	1	1	1		
7	90179-22526	NUT	1	1	1	1		
8	95817-08040	BOLT, FLANGE	6	6	6	6		
9	5GT-17551-00	HOUSING, BEARING	1	1	1	1		
10	93306-37206	BEARING	1	1	1	1		
11	90179-60699	NUT	1	1	1	1		
12	93306-20715	BEARING	1	1	1	1		
13	93101-30084	OIL SEAL	1	1	1	1		
14	5GT-17556-00	YOKE, JOINT	1	1	1	1		
15	90201-12191	WASHER, PLATE	1	1	1	1		
16	90179-12325	NUT	1	1	1	1		
17	93210-78544	O-RING	1	1	1	1		
18	97027-08030	BOLT	4	4	4	4		
19	92907-08600	WASHER, PLATE	4	4	4	4		
20	4KB-17531-00	SHIM, PINION (0.10T)	2	2	2	2		UR
	4KB-17531-10	SHIM, PINION (0.15T)	2	2	2	2		UR
	4KB-17531-20	SHIM, PINION (0.20T)	2	2	2	2		UR

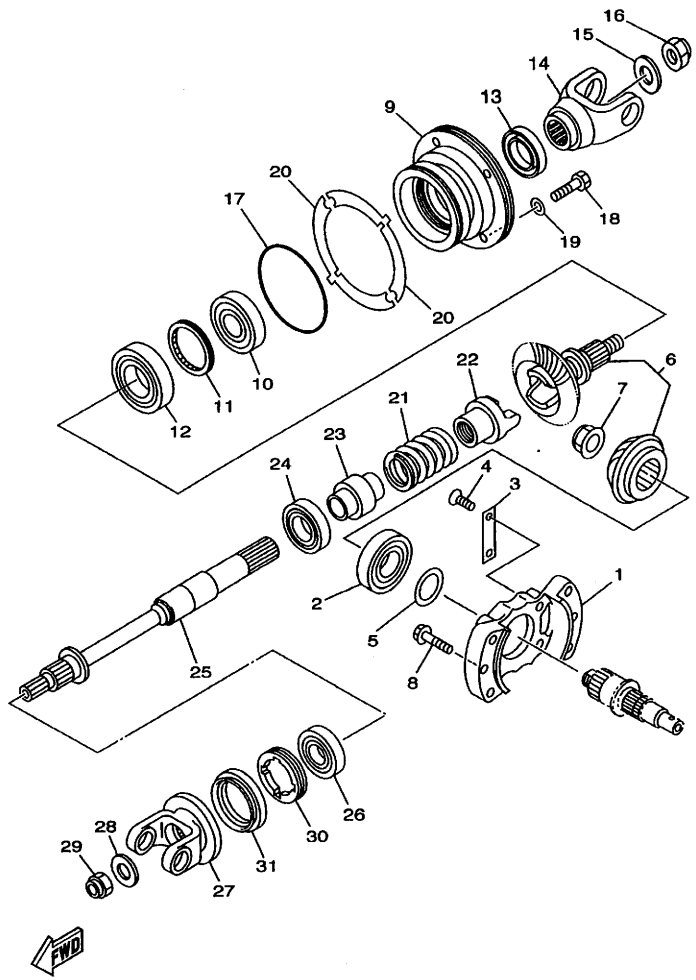

5GT1100-9160

FIG. 16 MIDDLE DRIVE GEAR

REF. NO.	PART NO.	DESCRIPTION	5GT6	5GT7	5GT9	5GTA		REMARKS
20	4KB-17531-30	SHIM, PINION (0.30T)	2	2	2	2		UR
	4KB-17531-40	SHIM, PINION (0.40T)	2	2	2	2		UR
	4KB-17531-50	SHIM, PINION (0.50T)	2	2	2	2		UR
	4KB-17531-60	SHIM, PINION (0.60T)	2	2	2	2		UR
21	90501-650L5	SPRING, COMPRESSION	1	1	1	1		
22	4VR-17527-00	CAM, DRIVEN	1	1	1	1		
23	4KB-46123-00	COUPLING, GEAR	1	1	1	1		
24	93306-00612	BEARING	1	1	1	1		
25	5GT-1755A-00	MIDDLE DRIVEN SHAFT ASSY	1	1	1	1		
26	93306-20517	BEARING (B6205)	1	1	1	1		
27	5GT-17576-00	YOKE,JOINT 2	1	1	1	1		
28	90201-14633	WASHER, PLATE	1	1	1	1		
29	90185-14070	NUT, SELF-LOCKING	1	1	1	1		
30	90179-55660	NUT	1	1	1	1		
31	93102-44454	OIL SEAL	1	1	1	1		

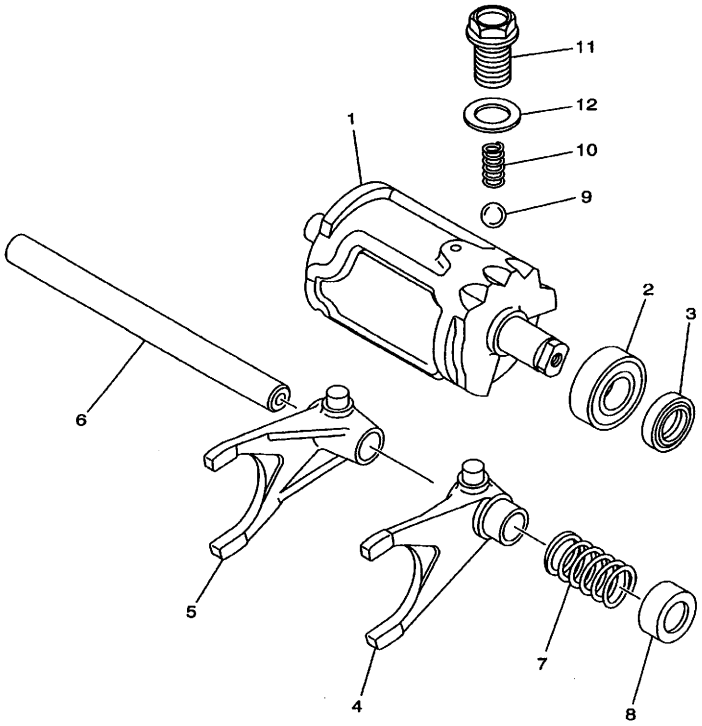

4WV1100-8170

FIG. 17 SHIFT CAM. FORK

REF. NO.	PART NO.	DESCRIPTION	5GT6	5GT7	5GT9	5GTA		REMARKS
1	4WV-18540-00	SHIFT CAM ASSY	1	1	1	1		
2	93306-00208	BEARING	1	1	1	1		
3	93102-15212	OIL SEAL	1	1	1	1		
4	5GT-18511-00	FORK, SHIFT 1	1	1	1	1		
5	5GT-18512-00	FORK, SHIFT 2	1	1	1	1		
6	5GT-18531-00	BAR, SHIFT FORK GUIDE 1	1	1	1	1		
7	90501-141L1	SPRING, COMPRESSION	1	1	1	1		
8	4WV-18323-00	CAP, SPRING	1	1	1	1		
9	93503-08007	BALL	1	1	1	1		
10	90501-10353	SPRING, COMPRESSION	1	1	1	1		
11	90105-14367	BOLT, WASHER BASED	1	1	1	1		
12	90430-14194	GASKET	1	1	1	1		

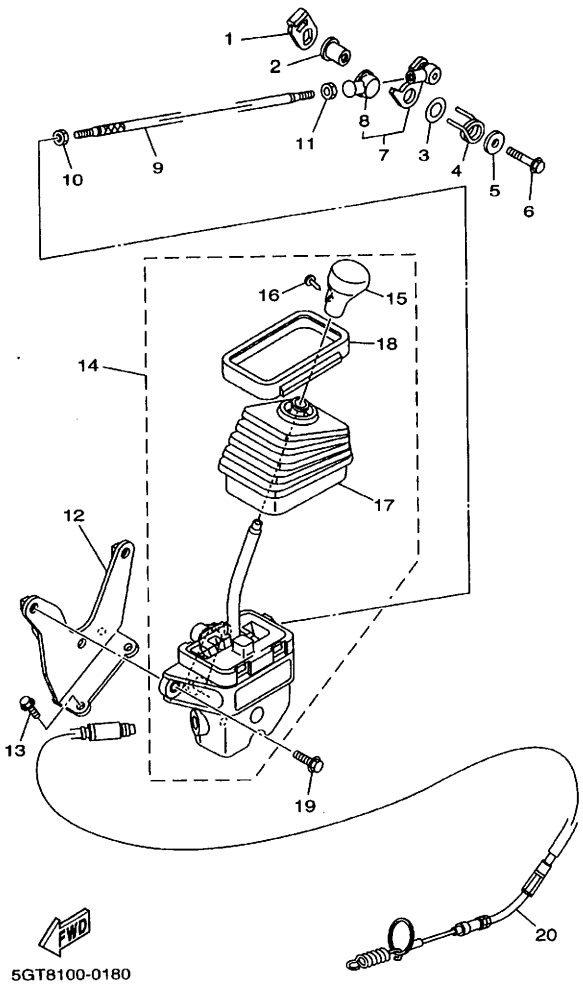

FIG. 18 SHIFT SHAFT

REF. NO.	PART NO.	DESCRIPTION	5GT6	5GT7	5GT9	5GTA		REMARKS
1	4SH-18198-00	LEVER	1	1	1	1		
2	90387-0613B	COLLAR	1	1	1	1		
3	90201-132G5	WASHER, PLATE	1	1	1	1		
4	90508-35764	SPRING, TORSION	1	1	1	1		
5	90201-06008	WASHER, PLATE	1	1	1	1		
6	95817-06035	BOLT, FLANGE	1	1	1	1		
7	4WV-18191-00	LEVER	1	1	1	1		
8	2H9-18154-00	.COVER, DUST	1	1	1	1		
9	4WV-18115-00	ROD, SHIFT	1	1	1	1		
10	90170-06289	NUT	1	1	1	1		
11	95307-06700	NUT	1	1	1	1		
12	5GT-18431-00	BRACKET, SHIFTER	1	1	1	1		
13	95817-06016	BOLT, FLANGE	3	3	3	3		
14	4WV-18300-02	SHIFTER ASSY	1	1	1	1		
15	4WV-18174-00	.KNOB, SHIFT LEVER	1	1	1	1		
16	90269-05055	.RIVET	1	1	1	1		
17	4WV-18131-00	.BOOT, SEALING	1	1	1	1		
18	4WV-18617-01	.STOPPER,RUBBER	1	1	1	1		
19	95807-08020	BOLT, FLANGE	3	3	3	3		
20	4WV-2637F-00	CABLE, CONTROL 2	1	1	1	1		

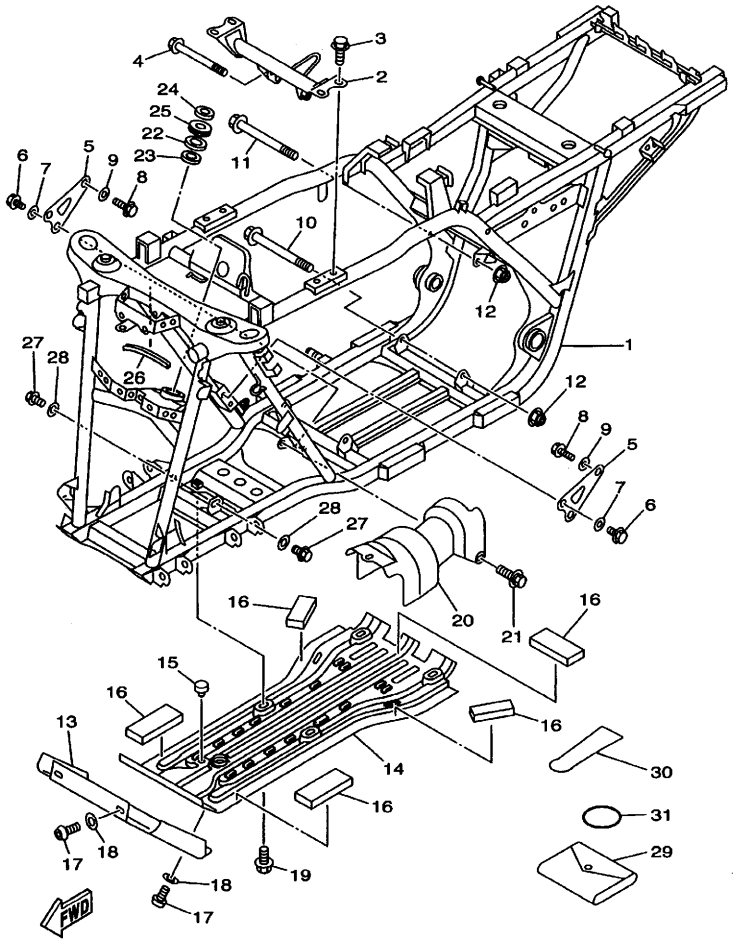

5GT1100-9190

FIG. 19 FRAME

REF. NO.	PART NO.	DESCRIPTION	5GT6	5GT7	5GT9	5GTA		REMARKS
1	5GT-21110-00	FRAME COMP.	1	1	1	1		
2	4WV-21315-00	STAY, ENGINE 2	1	1	1	1		
3	95817-08012	BOLT, FLANGE	4	4	4	4		
4	95817-10080	BOLT, FLANGE	1	1	1	1		
5	5GT-21316-00	STAY, ENGINE 3	2	2	2	2		
6	95817-08014	BOLT, FLANGE	4	4	4	4		
7	90201-08730	WASHER, PLATE	4	4	4	4		
8	95817-10035	BOLT, FLANGE	2	2	2	2		
9	92907-10200	WASHER, PLAIN	2	2	2	2		
10	95817-10190	BOLT, FLANGE	2	2	2	2		
11	95817-10140	BOLT, FLANGE	1	1	1	1		
12	95607-10200	NUT, SELF-LOCKING	3	3	3	3		
13	5GT-2147A-20	GUARD, ENGINE 1	1	1				
	5GT-2147A-30	GUARD, ENGINE 1			1	1		
14	5GT-2147E-00	GUARD, ENGINE 2	1	1	1	1		
15	4N0-27114-00	STOPPER, MAIN STAND	1	1	1	1		
16	41R-21717-00	DAMPER	5	5	5	5		
17	90109-081F0	BOLT	4	4	4	4		
18	90201-08730	WASHER, PLATE	4	4	4	4		
19	90119-08212	BOLT, WITH WASHER	4	4	4	4		
20	4WV-2147J-00	COVER, SHAFT 1	1	1	1	1		
21	90119-06108	BOLT, WITH WASHER	3	3	3	3		
22	93306-20331	BEARING	1	1	1	1		
23	93102-25099	OIL SEAL	1	1	1	1		
24	93102-25081	OIL SEAL	1	1	1	1		
25	5GT-23872-00	HOLDER, BEARING	1	1	1	1		
26	4GY-24188-00	MOLD, FUEL TANK	1	1	1	1		

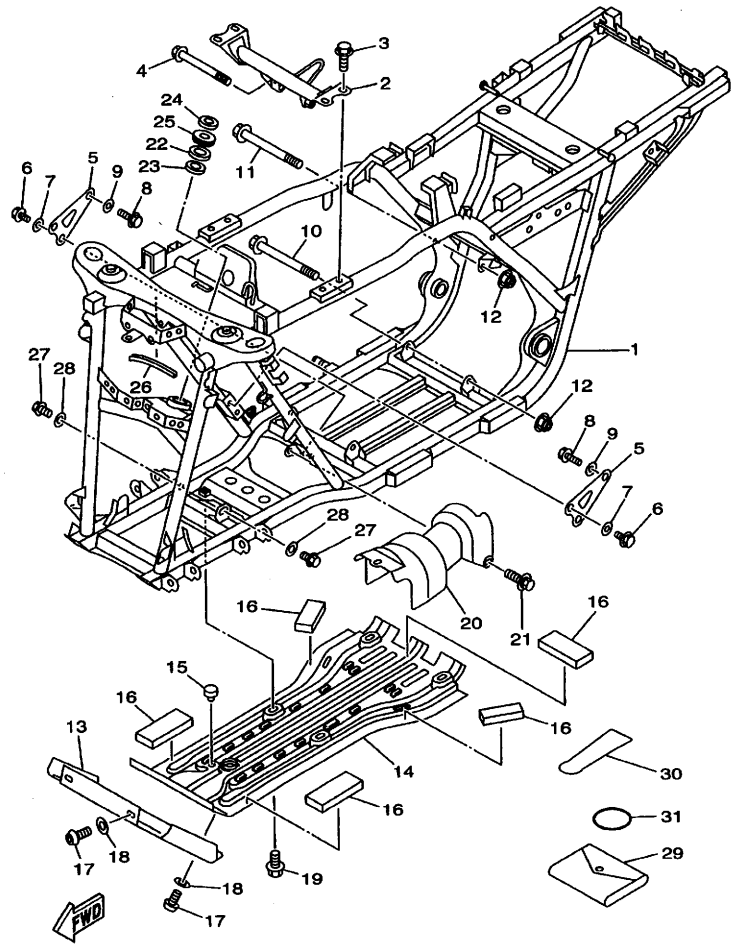

5GT1100-9190

FIG. 19 FRAME

REF. NO.	PART NO.	DESCRIPTION	5GT6	5GT7	5GT9	5GTA		REMARKS
27	95817-10025	BOLT, FLANGE	4	4	4	4		
28	90201-101J1	WASHER, PLATE	4	4	4	4		
29	4WV-28100-00	TOOL KIT	1	1	1	1		
30	1NV-2811A-00	GAUGE, AIR	1	1	1	1		
31	93210-41041	O-RING	1	1	1	1		

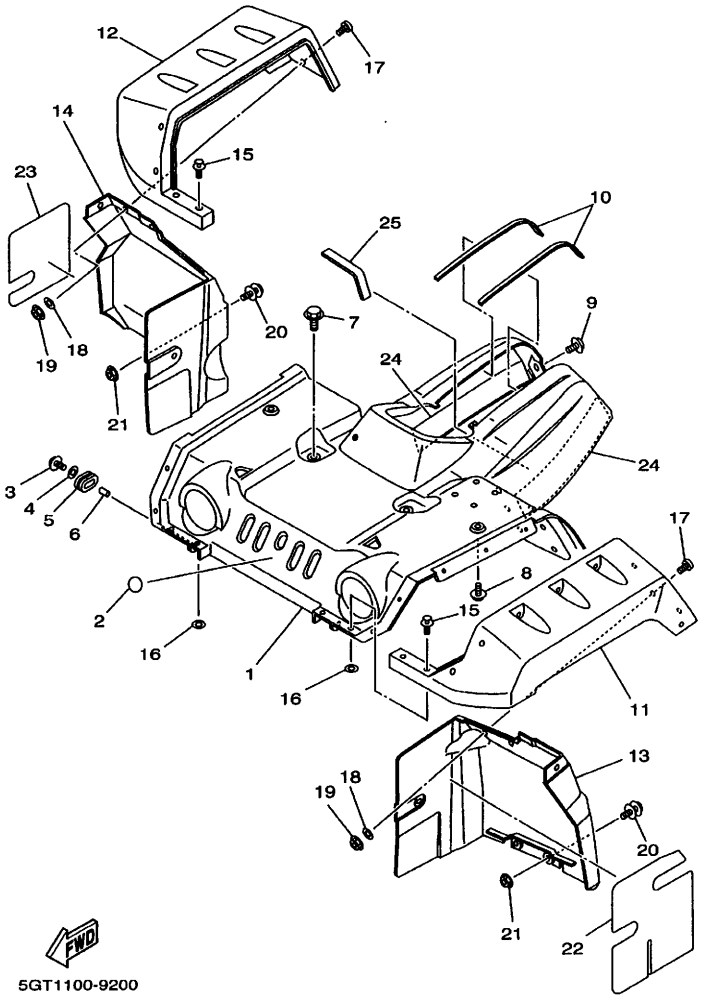

FIG. 20 FRONT FENDER

REF. NO.	PART NO.	DESCRIPTION	5GT6	5GT7	5GT9	5GTA		REMARKS
1	4WV-W2151-01	FRONT FENDER COMP.	1	1				UR RTR
	4WV-W2151-11	FRONT FENDER COMP.	1	1	1	1		UR PDG
	4WV-W2151-21	FRONT FENDER COMP.	1	1				UR DNYS1
2	5GT-2175B-00	TUNING FORK MARK	1	1	1	1		
3	95817-06030	BOLT, FLANGE	2	2	2	2		
4	90201-06074	WASHER, PLATE	2	2	2	2		
5	90480-01400	GROMMET	2	2	2	2		
6	90387-06387	COLLAR	2	2	2	2		
7	95807-08020	BOLT, FLANGE	2	2	2	2		
8	90119-06056	BOLT, WITH WASHER	2	2	2	2		
9	90159-06059	SCREW, WITH WASHER	4	4	4	4		
10	4WV-2171L-00	MOLE, SIDE COVER 1	2	2	2	2		
11	4WV-21551-00	FENDER, OVER	1	1	1	1		
12	4WV-21555-00	FENDER, OVER 2	1	1	1	1		
13	4WV-21559-00	FENDER, OVER 3	1	1	1	1		
14	4WV-21560-00	FENDER, OVER 4	1	1	1	1		
15	90269-07076	RIVET	22	22	22	22		
16	90201-076J4	WASHER, PLATE	20	20	20	20		
17	90154-05052	SCREW, BINDING	6	6	6	6		
18	90201-05029	WASHER, PLATE	6	6	6	6		
19	95707-05300	NUT, FLANGE	6	6	6	6		
20	90119-06063	BOLT, WITH WASHER	4	4	4	4		
21	95707-06500	NUT, FLANGE	4	4	4	4		
22	4WV-21541-00	DAMPER 1	1	1	1	1		
23	4WV-21542-00	DAMPER 2	1	1	1	1		
24	4WV-21543-00	PLATE 1	2	2	2	2		
25	2HX-24181-00	DAMPER, LOCATING 1	1	1	1	1		

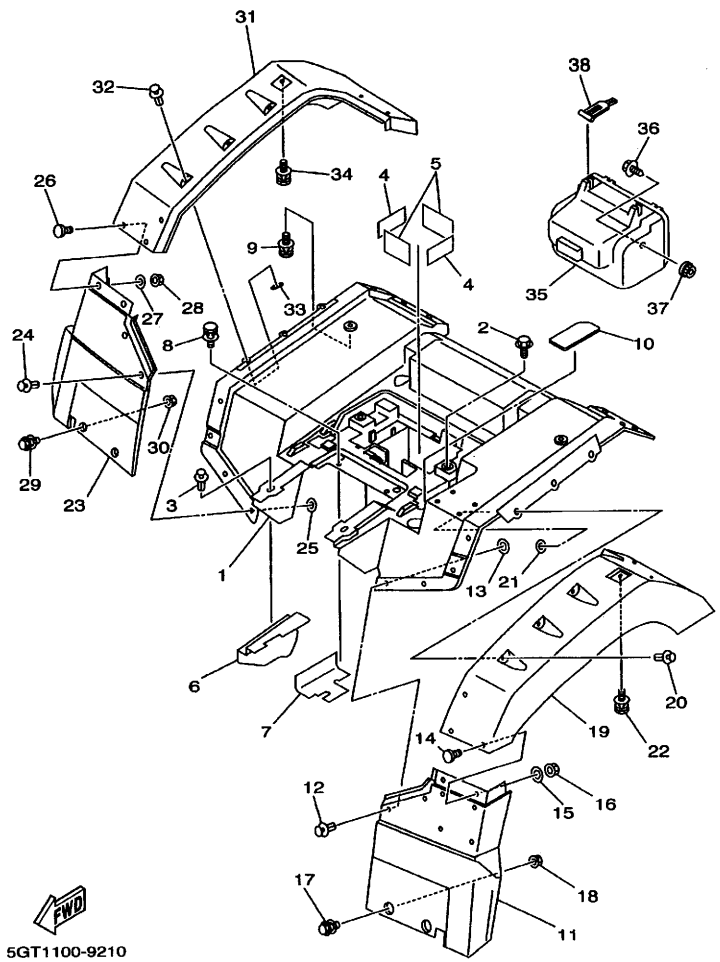

5GT1100-9210

FIG. 21 REAR FENDER

REF. NO.	PART NO.	DESCRIPTION	5GT6	5GT7	5GT9	5GTA		REMARKS
1	4WV-W2161-01	REAR FENDER COMP.	1	1				UR RTR
	4WV-W2161-11	REAR FENDER COMP.	1	1	1	1		UR PDG
	4WV-W2161-21	REAR FENDER COMP.	1	1				UR DNYS1
2	90109-065G4	BOLT	2	2	2	2		
3	90269-07076	RIVET	2	2	2	2		
4	26H-24145-00	DAMPER, SIDE COVER	2	2	2	2		
5	50W-82121-00	PAD, BATTERY	2	2	2	2		
6	4WV-21639-00	DAMPER 2	1	1	1	1		
7	4WV-21649-00	DAMPER	1	1	1	1		
8	90119-06056	BOLT, WITH WASHER	2	2	2	2		
9	90119-06205	BOLT, WITH WASHER	2	2	2	2		
10	5GT-21669-00	SEAL	1	1				UR FOR RTR
	5GT-21669-10	SEAL	1	1	1	1		UR FOR PDG
	5GT-21669-20	SEAL	1	1				UR FOR DNYS1
11	5GT-W2168-00	FLAP ASSY 1	1	1	1	1		
12	90269-07076	RIVET	2	2	2	2		
13	90201-076J4	WASHER, PLATE	2	2	2	2		
14	90154-05052	SCREW, BINDING	3	3	3	3		
15	90201-05029	WASHER, PLATE	3	3	3	3		
16	95707-05300	NUT, FLANGE	3	3	3	3		
17	90119-06063	BOLT, WITH WASHER	2	2	2	2		
18	95707-06500	NUT, FLANGE	2	2	2	2		
19	4WV-2162H-00	FLAP 3	1	1	1	1		
20	90269-07076	RIVET	7	7	7	7		
21	90201-076J4	WASHER, PLATE	7	7	7	7		
22	90119-06205	BOLT, WITH WASHER	1	1	1	1		
23	4WV-21691-00	FLAP	1	1	1	1		

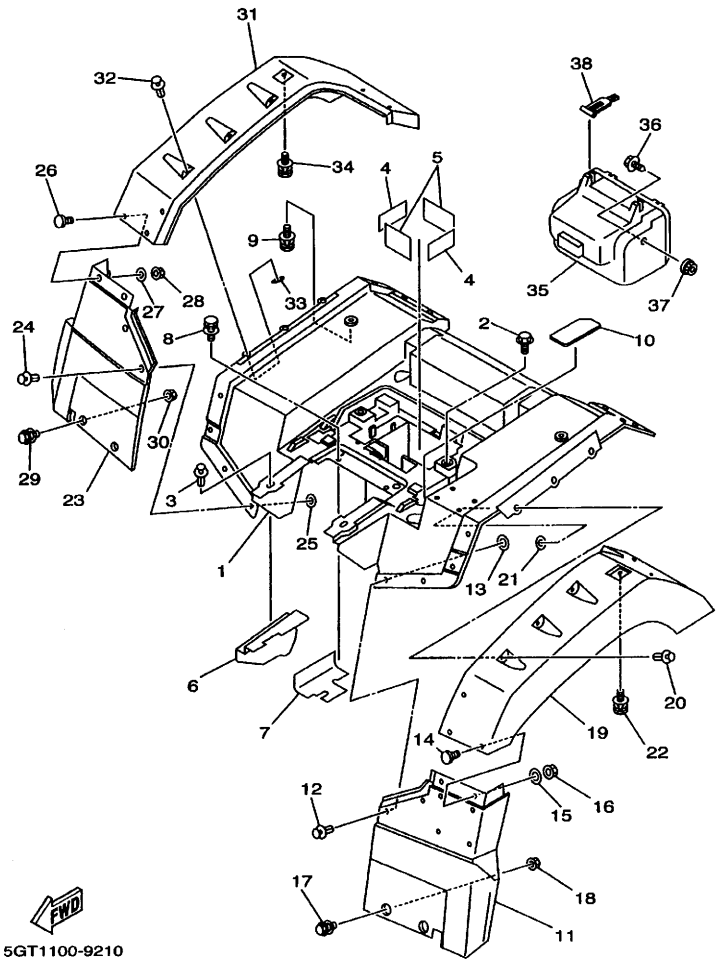

FIG. 21 REAR FENDER

REF. NO.	PART NO.	DESCRIPTION	5GT6	5GT7	5GT9	5GTA		REMARKS
24	90269-07076	RIVET	2	2	2	2		
25	90201-076J4	WASHER, PLATE	2	2	2	2		
26	90154-05052	SCREW, BINDING	3	3	3	3		
27	90201-05029	WASHER, PLATE	3	3	3	3		
28	95707-05300	NUT, FLANGE	3	3	3	3		
29	90119-06063	BOLT, WITH WASHER	2	2	2	2		
30	95707-06500	NUT, FLANGE	2	2	2	2		
31	4WV-2162J-00	FLAP 4	1	1	1	1		
32	90269-07076	RIVET	7	7	7	7		
33	90201-076J4	WASHER, PLATE	7	7	7	7		
34	90119-06205	BOLT, WITH WASHER	1	1	1	1		
35	5GT-2160A-00	BOX COMP.	1	1	1	1		
36	90119-06060	BOLT, WITH WASHER	2	2	2	2		
37	95607-06200	NUT, SELF U-FLANGE	2	2	2	2		
38	59V-21646-00	BAND	2	2	2	2		

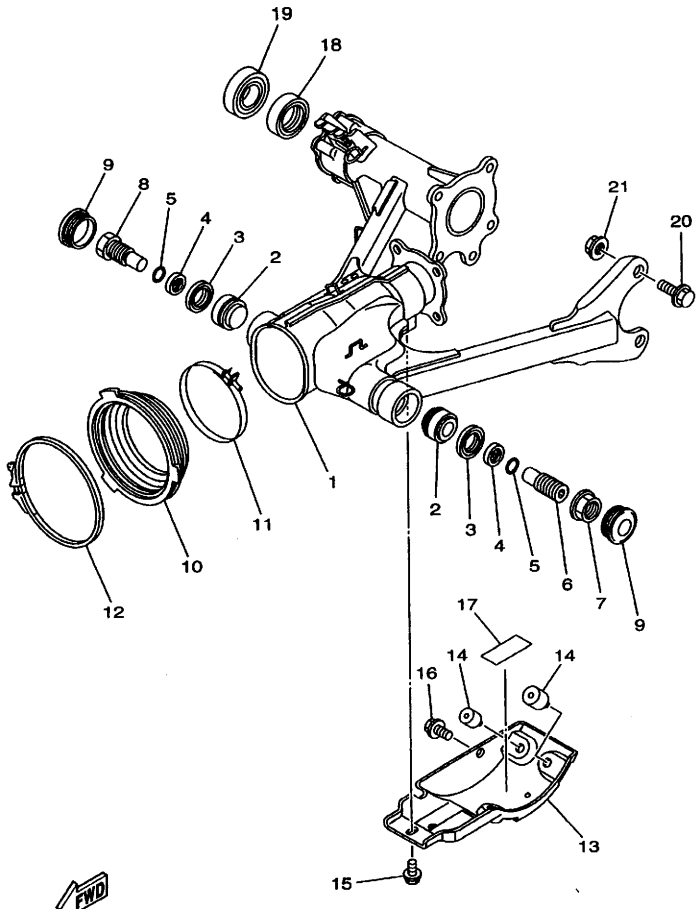

5GT1100-9220

FIG. 22 REAR ARM

REF. NO.	PART NO.	DESCRIPTION	5GT6	5GT7	5GT9	5GTA		REMARKS
1	5GT-22110-00	REAR ARM COMP.	1	1	1	1		
2	93332-00080	BEARING	2	2	2	2		
3	93102-25017	OIL SEAL	2	2	2	2		
4	90387-1707V	COLLAR	2	2	2	2		
5	93210-17718	O-RING	2	2	2	2		
6	4WV-22141-00	SHAFT, PIVOT	1	1	1	1		
7	4WV-22143-00	NUT	1	1	1	1		
8	4KM-22141-00	SHAFT, PIVOT	1	1	1	1		
9	90338-34264	PLUG	2	2	2	2		
10	4KB-22189-00	BOOT, RUBBER	1	1	1	1		
11	90460-99289	CLAMP, HOSE	1	1	1	1		
12	4KB-22591-00	CLAMP, HOSE	1	1	1	1		
13	5GT-2219X-00	COVER	1	1	1	1		
14	4N0-27114-00	STOPPER, MAIN STAND	2	2	2	2		
15	95827-08012	BOLT, FLANGE	1	1	1	1		
16	95827-10016	BOLT, FLANGE	1	1	1	1		
17	1UJ-21638-00	DAMPER 1	1	1	1	1		
18	93101-35097	OIL SEAL	1	1	1	1		
19	93306-20531	BEARING	1	1	1	1		
20	95827-12025	BOLT, FLANGE	2	2	2	2		
21	95607-12200	NUT, SELF-LOCKING	2	2	2	2		

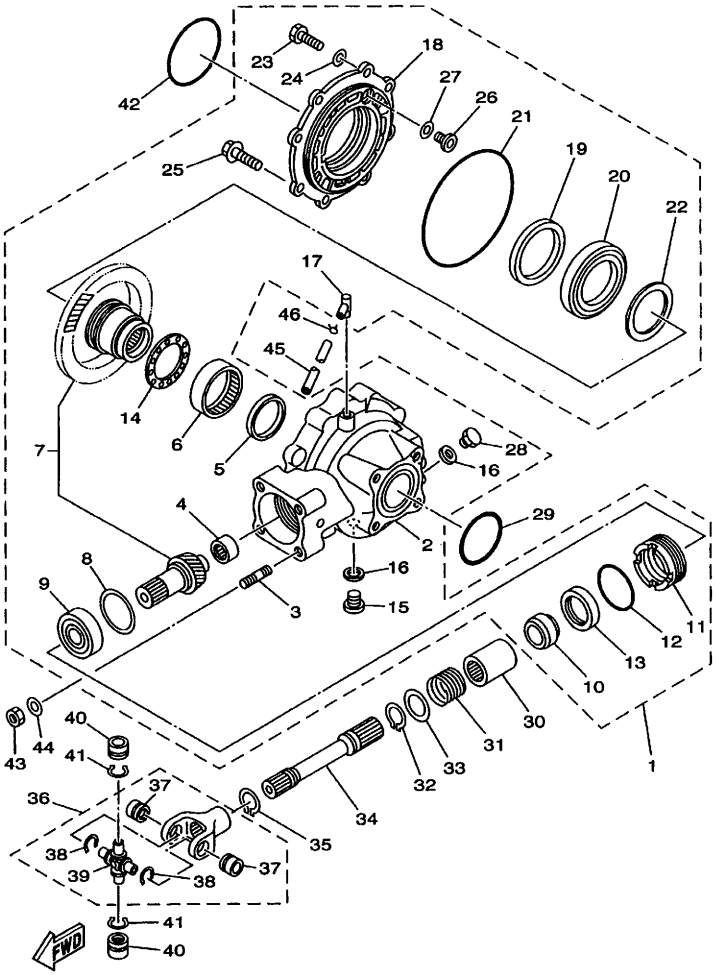

5GT1100-9230

FIG. 23 DRIVE SHAFT

REF. NO.	PART NO.	DESCRIPTION	5GT6	5GT7	5GT9	5GTA		REMARKS
1	5GT-46101-00	REAR AXLE GEAR CASE ASSY	1	1	1	1		
2	4WV-46151-00	.HOUSING, DRIVE SHAFT	1	1	1	1		
3	90116-10593	.BOLT, STUD	4	4	4	4		
4	2H7-46102-00	.BEARING ASSY	1	1	1	1		
5	93101-52116	.OIL SEAL	1	1	1	1		
6	93317-85569	.BEARING	1	1	1	1		
7	5GT-Y4612-00	.RING GEAR SET	1	1	1	1		
8	1J7-17537-Y0-30	.SHIM, THRUST (0.30T)	1	1	1	1		UR
	1J7-17537-Y0-40	.SHIM, THRUST (0.40T)	1	1	1	1		UR
	1J7-17537-Y0-50	.SHIM, THRUST (0.50T)	1	1	1	1		UR
9	93306-30568	.BEARING	1	1	1	1		
10	90387-255H9	.COLLAR	1	1	1	1		
11	29U-46125-00	.RETAINER, BEARING	1	1	1	1		
12	93210-59531	.O-RING	1	1	1	1		
13	93101-38098	.OIL SEAL	1	1	1	1		
14	24W-46118-00-12	.WASHER, THRUST (1.2T)	1	1	1	1		UR
	24W-46118-00-14	.WASHER, THRUST (1.4T)	1	1	1	1		UR
	24W-46118-00-16	.WASHER, THRUST (1.6T)	1	1	1	1		UR
	24W-46118-00-18	.WASHER, THRUST (1.8T)	1	1	1	1		UR
	24W-46118-00-20	.WASHER, THRUST (2.0T)	1	1	1	1		UR
15	90340-14046	.PLUG, STRAIGHT SCREW	1	1	1	1		
16	214-11198-01	.GASKET	2	2	2	2		
17	2N4-15371-00	.BREATHER	1	1	1	1		
18	3HN-46152-01	.HOUSING, BEARING	1	1	1	1		
19	93102-65386	.OIL SEAL	1	1	1	1		
20	93316-01301	.BEARING	1	1	1	1		
21	93211-51749	.O-RING	1	1	1	1		

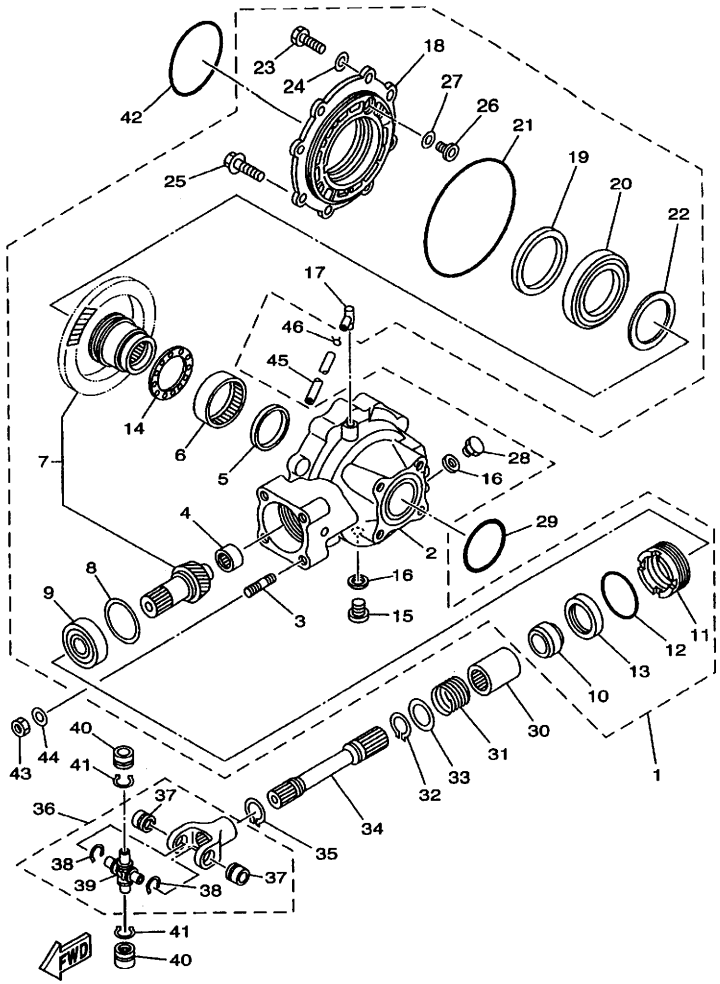

5GT1100-9230

FIG. 23 DRIVE SHAFT

REF. NO.	PART NO.	DESCRIPTION	5GT6	5GT7	5GT9	5GTA		REMARKS
22	24W-46117-00-25	.SHIM, RING GEAR (0.25T)	1	1	1	1		UR
	24W-46117-00-30	.SHIM, RING GEAR (0.30T)	1	1	1	1		UR
	24W-46117-00-40	.SHIM, RING GEAR (0.40T)	1	1	1	1		UR
	24W-46117-00-50	.SHIM, RING GEAR (0.50T)	1	1	1	1		UR
23	97027-08025	.BOLT	6	6	6	6		
24	92907-08600	.WASHER, PLATE	6	6	6	6		
25	95817-10025	.BOLT, FLANGE	2	2	2	2		
26	1FK-46156-00	.STOPPER, RING GEAR	1	1	1	1		
27	1FK-46157-00-15	.SHIM, STOPPER (T=0.15)	1	1	1	1		UR
	1FK-46157-00-20	.SHIM, STOPPER (T=0.20)	1	1	1	1		UR
28	90340-14029	.PLUG, STRAIGHT SCREW	1	1	1	1		
29	93210-65705	O-RING	1	1	1	1		
30	5GT-46123-00	COUPLING, GEAR	1	1	1	1		
31	90501-260L6	SPRING, COMPRESSION	1	1	1	1		
32	99009-25400	CIRCLIP	1	1	1	1		
33	90201-25289	WASHER, PLATE	1	1	1	1		
34	5GT-46172-00	SHAFT, DRIVE	1	1	1	1		
35	93410-22039	CIRCLIP	1	1	1	1		
36	4KD-46107-00	CROSS JOINT COMP. 2	1	1	1	1		
37	93399-99926	.BEARING	2	2	2	2		
38	93440-20088	.CIRCLIP	2	2	2	2		
39	2HR-46187-00	.SPIDER	1	1	1	1		
40	93399-99926	BEARING	2	2	2	2		
41	93440-20088	CIRCLIP	2	2	2	2		
42	93210-85706	O-RING	1	1	1	1		
43	90179-10394	NUT	4	4	4	4		
44	90201-10774	WASHER, PLATE	4	4	4	4		

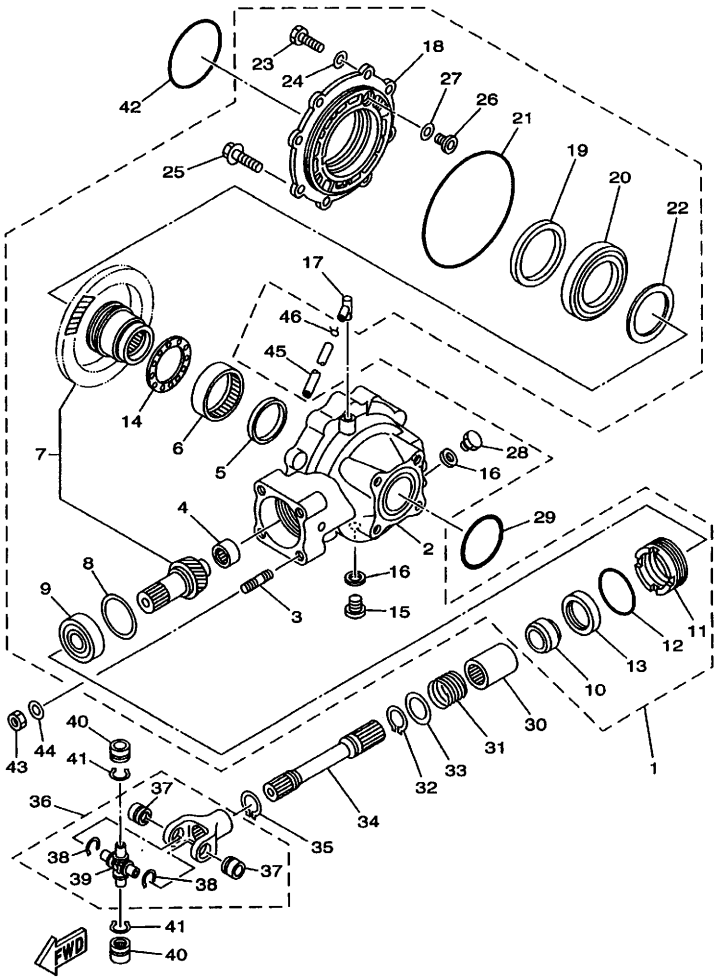

5GT1100-9230

FIG. 23 DRIVE SHAFT

REF. NO.	PART NO.	DESCRIPTION	5GT6	5GT7	5GT9	5GTA		REMARKS
45	90445-072J4	HOSE (L1120)	1	1	1	1		
46	90467-07029	CLIP	1	1	1	1		

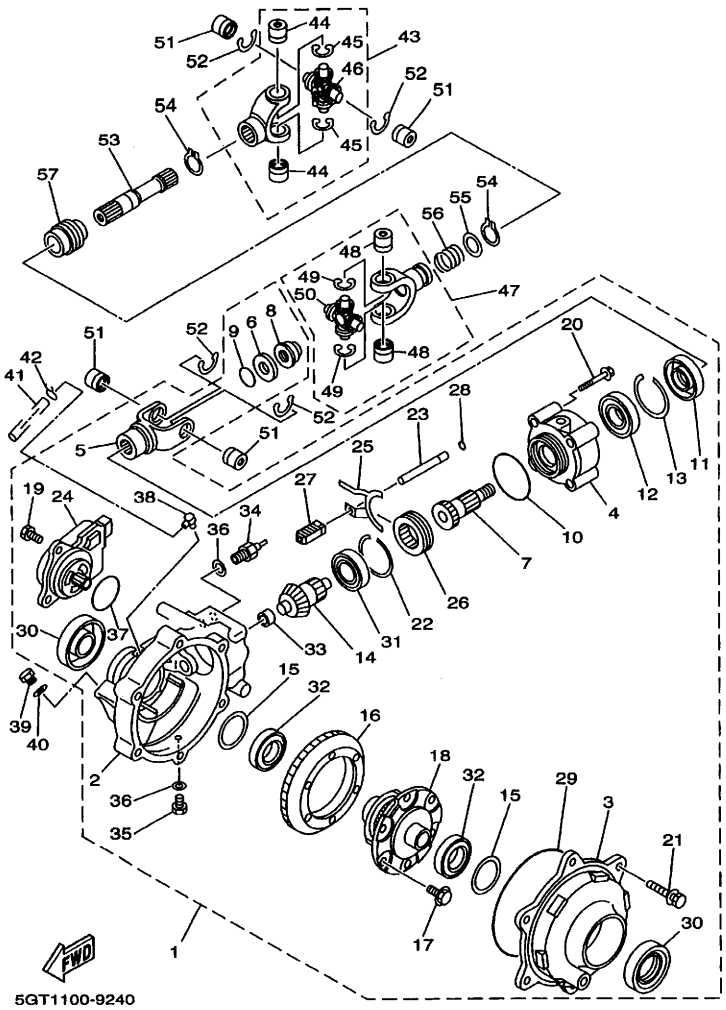

FIG. 24 FRONT DIFFERENTIAL

REF. NO.	PART NO.	DESCRIPTION	5GT6	5GT7	5GT9	5GTA		REMARKS
1	5GT-46160-00	FRONT AXLE GEAR CASE COMP.	1	1	1	1		
2	4WV-46161-00	.HOUSING, SHAFT DRIVE 2	1	1	1	1		
3	4WV-46162-00	.HOUSING, BEARING 2	1	1	1	1		
4	4WV-46144-00	.HOUSING, PINION BEARING	1	1	1	1		
5	5GT-46146-00	.YOKE, JOINT 2	1	1	1	1		
6	90201-14633	.WASHER, PLATE	1	1	1	1		
7	5GT-46121-00	.GEAR, DRIVE PINION	1	1	1	1		
8	4WV-46145-00	.NUT 1	1	1	1	1		
9	93210-14359	.O-RING	1	1	1	1		
10	93210-69628	.O-RING	1	1	1	1		
11	4WV-46163-00	.SEAL,OIL 1	1	1	1	1		
12	4WV-46164-00	.BEARING 1	1	1	1	1		
13	4WV-46142-00	.RING,HOLE SNAP 1	1	1	1	1		
14	5GT-46141-00	.PINION, DRIVE 2	1	1	1	1		
15	4WV-46119-00	.SHIM, THRUST (0.1T)	1	1	1	1		UR
	4WV-46119-10	.SHIM, THRUST (0.2T)	1	1	1	1		UR
	4WV-46119-20	.SHIM, THRUST (0.3T)	1	1	1	1		UR
	4WV-46119-30	.SHIM, THRUST (0.4T)	1	1	1	1		UR
	4WV-46119-40	.SHIM, THRUST (0.5T)	1	1	1	1		UR
	4WV-46119-50	.SHIM, THRUST (1.0T)	1	1	1	1		UR
	4WV-46119-60	.SHIM, THRUST (1.5T)	1	1	1	1		UR
	4WV-46119-70	.SHIM, THRUST (2.0T)	1	1	1	1		UR
	4WV-46119-80	.SHIM, THRUST (2.5T)	1	1	1	1		UR
16	5GT-46131-00	.GEAR, RING 2	1	1	1	1		
17	4WV-46155-00	.BOLT 1	6	6	6	6		
18	5GT-46470-00	.LIMITED SLIP DIFF. ASSY	1	1	1	1		
19	91317-08020	.BOLT	3	3	3	3		

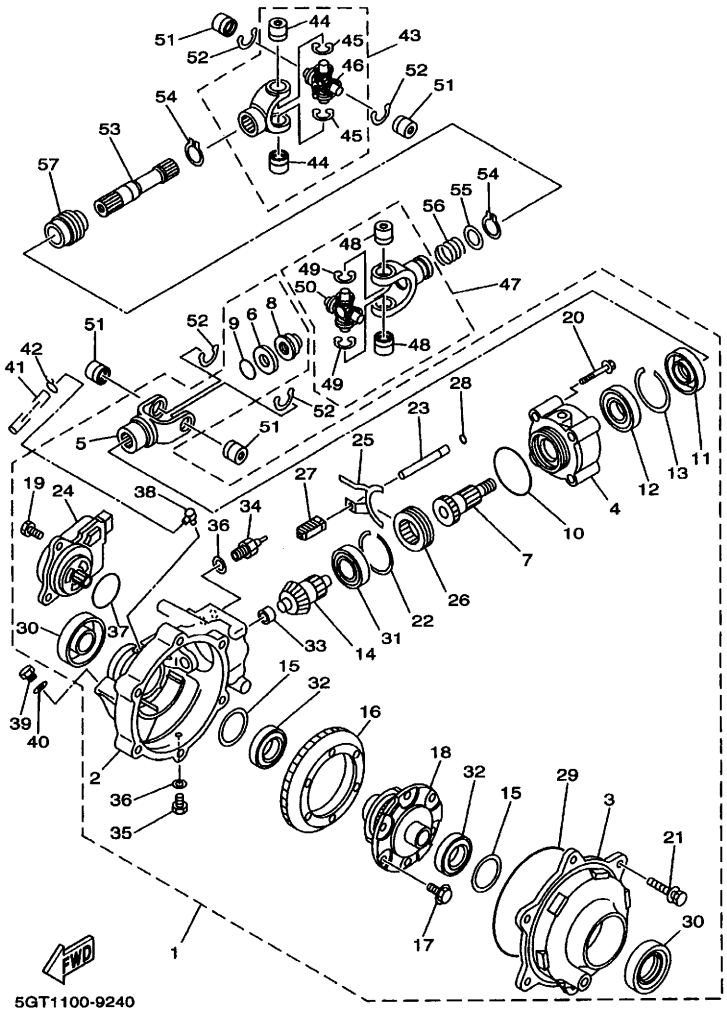

FIG. 24 FRONT DIFFERENTIAL

REF. NO.	PART NO.	DESCRIPTION	5GT6	5GT7	5GT9	5GTA		REMARKS
20	4WV-46158-00	.BOLT 2	4	4	4	4		
21	4WV-46159-00	.BOLT 3	6	6	6	6		
22	4WV-46143-00	.RING,HOLE SNAP 2	1	1	1	1		
23	4WV-18318-00	.SHAFT, SHIFTER	1	1	1	1		
24	4WV-4616A-00	.SERVO MOTOR COMP	1	1	1	1		
25	4WV-18514-00	.FORK, SHIFT 4	1	1	1	1		
26	4WV-46441-00	.CLUTCH,DRIVEN	1	1	1	1		
27	4WV-18319-00	.SHAFT 2	1	1	1	1		
28	4WV-46134-00	.O-RING 1	1	1	1	1		
29	4WV-46135-00	.O-RING 2	1	1	1	1		
30	93102-35380	.OIL SEAL	2	2	2	2		
31	4WV-46165-00	.BEARING 2	1	1	1	1		
32	4WV-46166-00	.BEARING 3	2	2	2	2		
33	4WV-46167-00	.BEARING 4	1	1	1	1		
34	3GD-82540-11	.NEUTRAL SWITCH ASSY	1	1	1	1		
35	4WV-46168-00	.PLUG, DRAIN 1	1	1	1	1		
36	4WV-46132-00	.GASKET 1	2	2	2	2		
37	93210-50768	.O-RING	1	1	1	1		
38	2N4-15371-00	.BREATHER	1	1	1	1		
39	90340-14029	PLUG, STRAIGHT SCREW	1	1	1	1		
40	214-11198-01	GASKET	1	1	1	1		
41	90445-072J3	HOSE (L890)	1	1	1	1		
42	90467-07029	CLIP	1	1	1	1		
43	5GT-46107-00	CROSS JOINT COMP. 2	1	1	1	1		
44	93399-99948	.BEARING	2	2	2	2		
45	93440-20088	.CIRCLIP	2	2	2	2		
46	5GT-46187-00	.SPIDER	1	1	1	1		

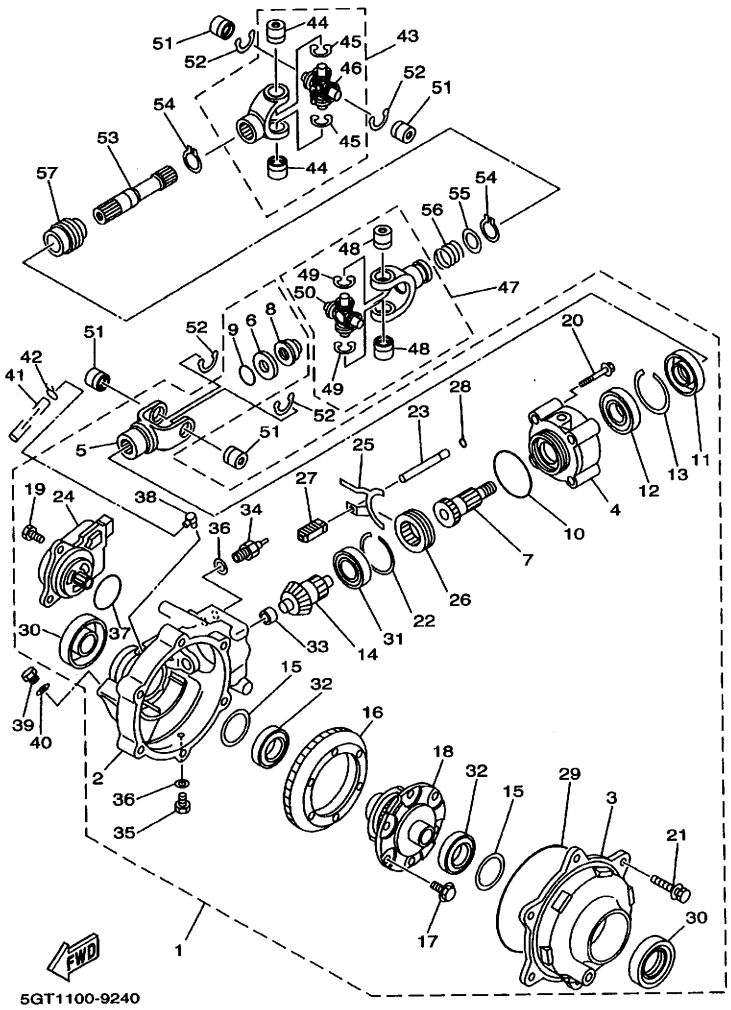

FIG. 24 FRONT DIFFERENTIAL

REF. NO.	PART NO.	DESCRIPTION	5GT6	5GT7	5GT9	5GTA		REMARKS
47	5GT-46108-00	CROSS JOINT COMP. 3	1	1	1	1		
48	93399-99948	.BEARING	2	2	2	2		
49	93440-20088	.CIRCLIP	2	2	2	2		
50	5GT-46187-00	.SPIDER	1	1	1	1		
51	93399-99948	BEARING	4	4	4	4		
52	93440-20088	CIRCLIP	4	4	4	4		
53	5GT-46173-00	SHAFT, DRIVE 2	1	1	1	1		
54	99009-19400	CIRCLIP	2	2	2	2		
55	90201-20266	WASHER, PLATE (1.0T)	1	1	1	1		
56	90501-235L9	SPRING, COMPRESSION	1	1	1	1		
57	5GT-46136-00	SEAL 1	1	1	1	1		

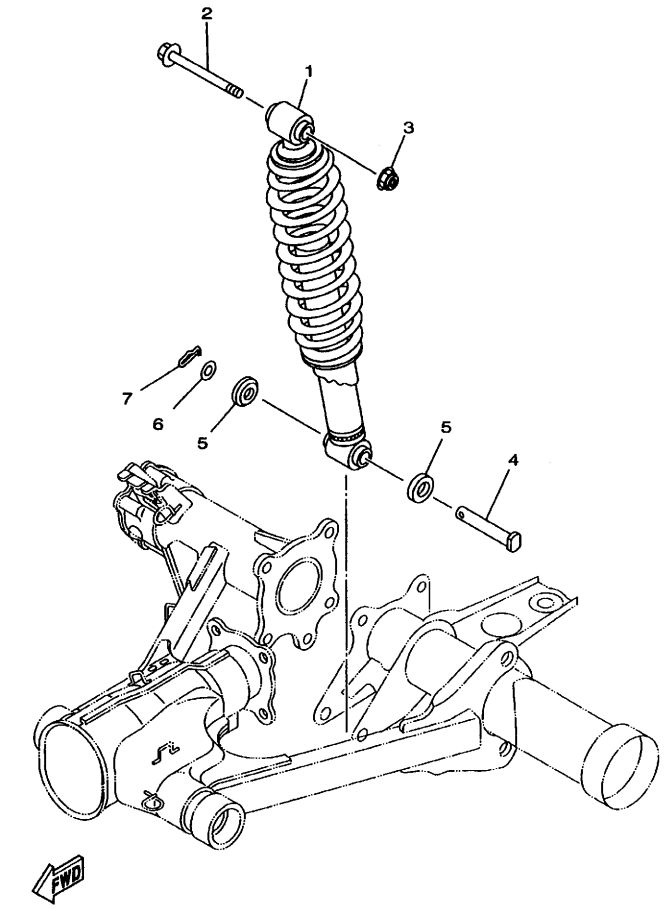

5GT1100-9250

FIG. 25 REAR SUSPENSION

REF. NO.	PART NO.	DESCRIPTION	5GT6	5GT7	5GT9	5GTA		REMARKS
1	5GT-22210-00	SHOCK ABSORBER ASSY, REAR	1	1	1	1		
2	90105-12425	BOLT, WASHER BASED	1	1	1	1		
3	90185-12072	NUT, SELF-LOCKING	1	1	1	1		
4	90240-12092	PIN, CLEVIS	1	1	1	1		
5	1W1-22128-00	COVER, THRUST 1	2	2	2	2		
6	90201-127J6	WASHER, PLATE	1	1	1	1		
7	91401-30025	PIN, COTTER	1	1	1	1		

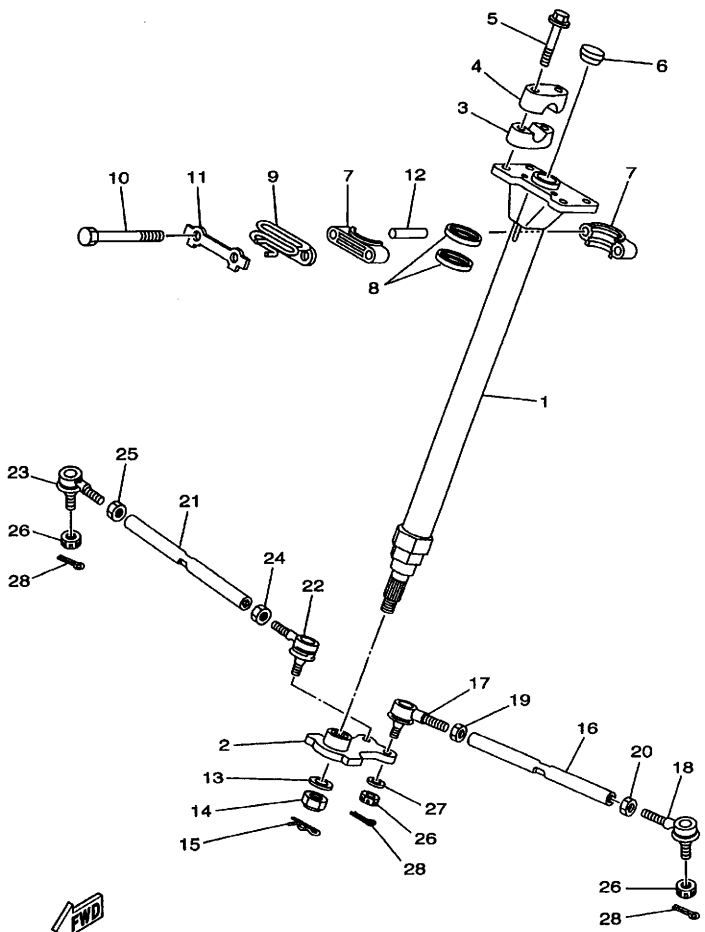

4WV1100-8260

FIG. 26 STEERING

REF. NO.	PART NO.	DESCRIPTION	5GT6	5GT7	5GT9	5GTA		REMARKS
1	5GT-23813-01	COLUMN, STEERING 2	1	1	1	1		
2	4WV-23816-00	ARM, PITMAN	1	1	1	1		
3	2HR-23442-00	HOLDER, HANDLE LOWER	2	2	2	2		
4	8K1-23814-00	HOLDER, HANDLE	2	2	2	2		
5	95827-08050	BOLT, FLANGE	4	4	4	4		
6	90336-28053	PLUG, TAPER	1	1	1	1		
7	1UY-23812-00	PLANE BEARING, STEERING	2	2	2	2		
8	93112-31011	OIL SEAL	2	2	2	2		
9	4KB-23868-01	BRACKET, STEERING LOWER	1	1	1	1		
10	97027-08060	BOLT	2	2	2	2		
11	1UY-23894-01	WASHER, LOCK 1	1	1	1	1		
12	90387-090R0	COLLAR	2	2	2	2		
13	90201-14222	WASHER, PLATE	1	1	1	1		
14	90185-14081	NUT, SELF-LOCKING	1	1	1	1		
15	90468-16191	CLIP	1	1	1	1		
16	4WV-23831-00	ROD, TIE	1	1	1	1		
17	1UY-23841-01	JOINT, UNIVERSAL 1	1	1	1	1		
18	1UY-23845-01	JOINT, UNIVERSAL 2	1	1	1	1		
19	95307-10700	NUT	1	1	1	1		
20	90170-10186	NUT	1	1	1	1		(L.H. THREAD)
21	4WV-23831-00	ROD, TIE	1	1	1	1		
22	1UY-23841-01	JOINT, UNIVERSAL 1	1	1	1	1		
23	1UY-23845-01	JOINT, UNIVERSAL 2	1	1	1	1		
24	95307-10700	NUT	1	1	1	1		
25	90170-10186	NUT	1	1	1	1		(L.H. THREAD)
26	90171-10046	NUT, CASTLE	4	4	4	4		
27	92990-10600	WASHER, PLATE	2	2	2	2		

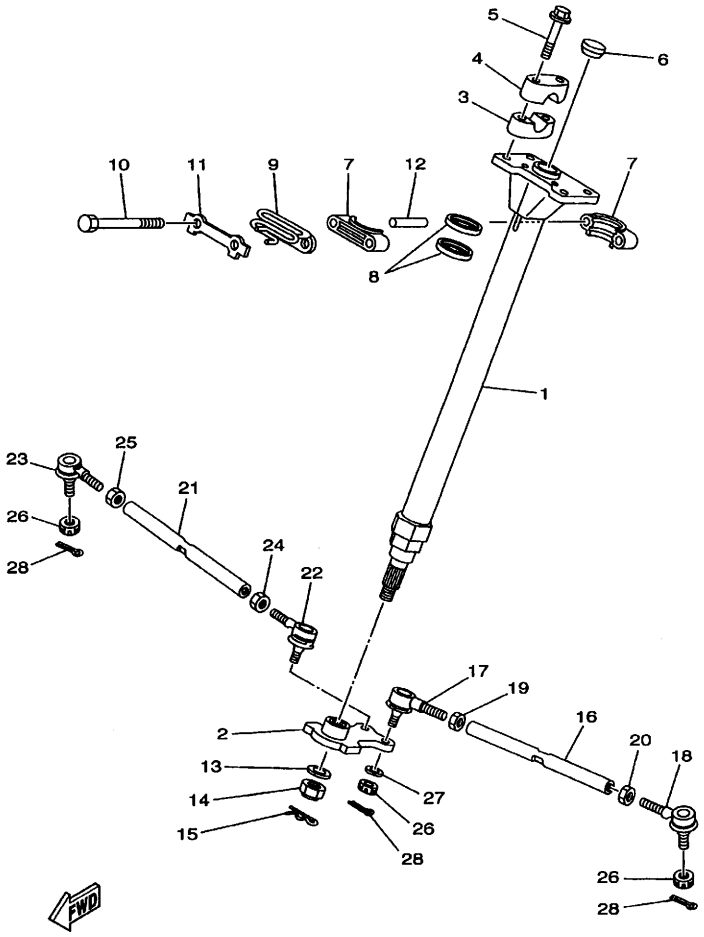

FIG. 26 STEERING

REF. NO.	PART NO.	DESCRIPTION	5GT6	5GT7	5GT9	5GTA		REMARKS
28	91401-20020	PIN, COTTER	4	4	4	4		

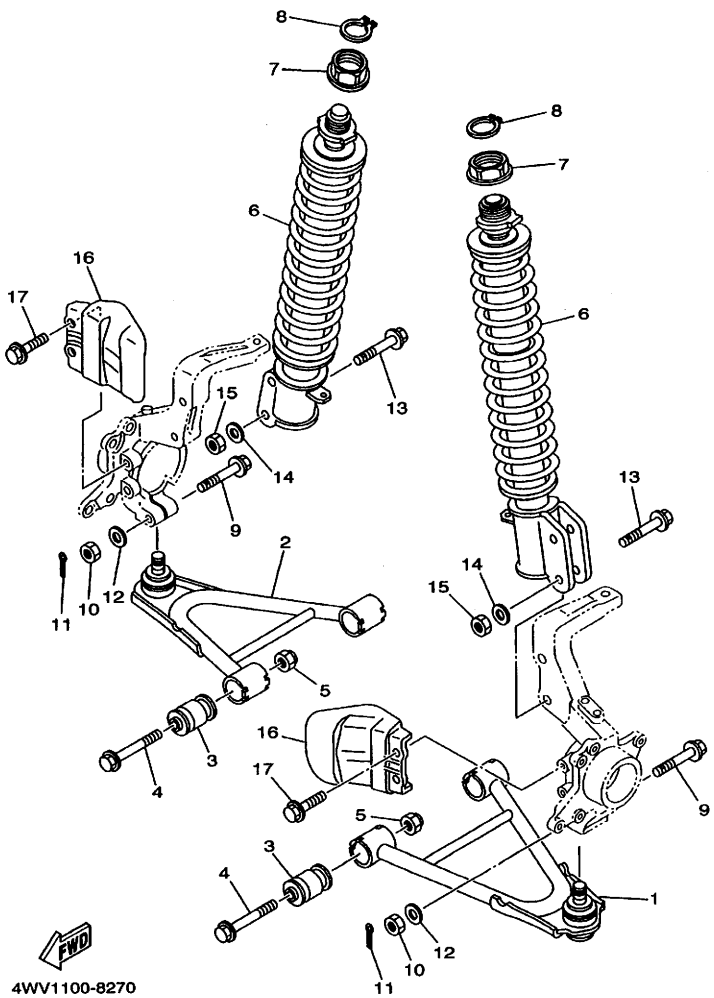

FIG. 27 FRONT SUSPENSION. WHEEL

REF. NO.	PART NO.	DESCRIPTION	5GT6	5GT7	5GT9	5GTA		REMARKS
1	5GT-23570-01	FRONT LOWER ARM COMP. (LEFT)	1	1	1	1		
2	5GT-23580-01	FRONT LOWER ARM COMP. (RIGHT)	1	1	1	1		
3	4WV-23526-00	BUSH	4	4	4	4		
4	90105-10253	BOLT, WASHER BASED	4	4	4	4		
5	90185-10060	NUT, SELF-LOCKING	4	4	4	4		
6	4WV-23350-00	SHOCK ABSORBER ASSY	2	2	2	2		
7	90179-35625	NUT	2	2	2	2		
8	93410-32075	CIRCLIP	2	2	2	2		
9	90105-10728	BOLT, WASHER BASED	2	2	2	2		
10	95337-10600	NUT	2	2	2	2		
11	91401-20020	PIN, COTTER	2	2	2	2		
12	90201-08759	WASHER, PLATE	2	2	2	2		
13	95817-12050	BOLT, FLANGE	4	4	4	4		
14	90201-122H1	WASHER, PLATE	4	4	4	4		
15	95617-12100	NUT, U	4	4	4	4		
16	4WV-2331M-00	COVER, RING	2	2	2	2		
17	90119-06228	BOLT, WITH WASHER	4	4	4	4		

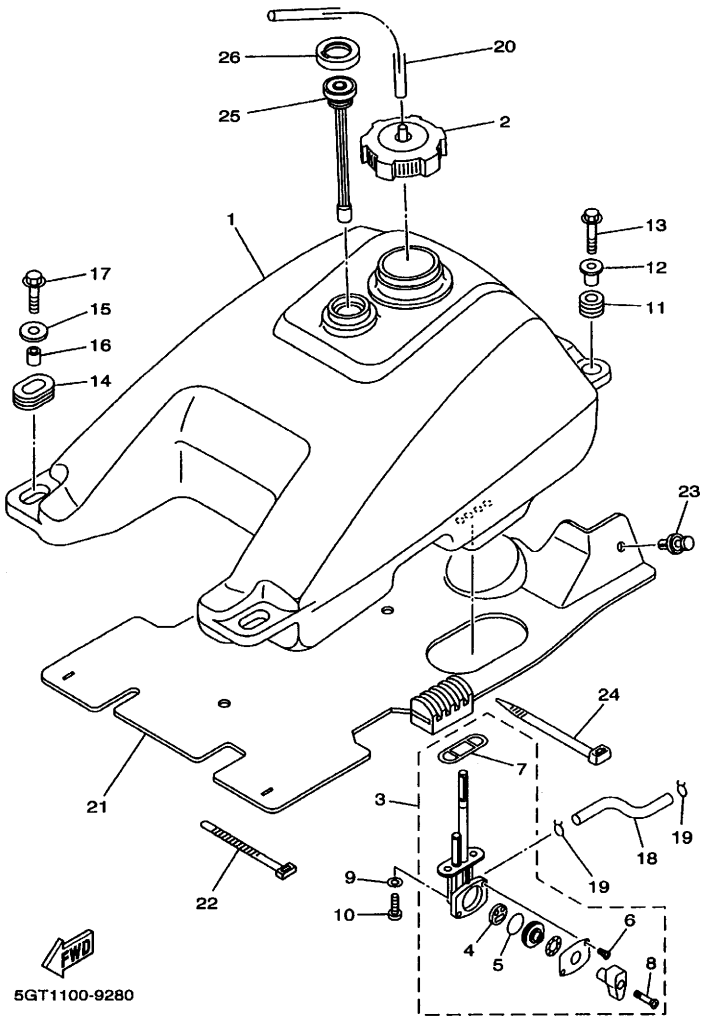

FIG. 28 FUEL TANK

REF. NO.	PART NO.	DESCRIPTION	5GT6	5GT7	5GT9	5GTA		REMARKS
1	4WV-24110-00	FUEL TANK COMP.	1	1	1	1		
2	1UY-24610-00	CAP ASSY	1	1	1	1		
3	5GT-24500-00	FUEL COCK ASSY 1	1	1	1	1		
4	3AJ-24523-00	.VALVE PACKING	1	1	1	1		
5	3AJ-24534-00	.SEAL, COCK	1	1	1	1		
6	97801-03008	.SCREW, PAN HEAD	2	2	2	2		
7	4X8-24512-00	.O-RING	1	1	1	1		
8	98606-04018	.SCREW, OVAL HEAD	1	1	1	1		
9	90202-05193	WASHER, PLATE	2	2	2	2		
10	90149-06011	SCREW	2	2	2	2		
11	90480-18290	GROMMET	2	2	2	2		
12	90387-066J1	COLLAR	2	2	2	2		
13	95807-06030	BOLT, FLANGE	2	2	2	2		
14	90480-01400	GROMMET	2	2	2	2		
15	90201-060L5	WASHER, PLATE	2	2	2	2		
16	90387-07598	COLLAR	2	2	2	2		
17	90119-06073	BOLT, WITH WASHER	2	2	2	2		
18	90445-10679	HOSE (L115)	1	1	1	1		
19	90467-09103	CLIP	2	2	2	2		
20	90445-083J5	HOSE (L600)	1	1	1	1		
21	4WV-2414H-00	DAMPER, PLATE 1	1		1			
	5GT-2414H-00	DAMPER, PLATE 1		1		1		
22	437-83936-11	BAND, SWITCH CORD	2	2	2	2		
23	90269-07076	RIVET	2	2	2	2		
24	1UA-82591-00	BAND	2	2	2	2		
25	4SH-24260-00	FUEL METER ASSY	1	1	1	1		
26	4SH-24261-00	HOUSING, FUEL METER	1	1	1	1		

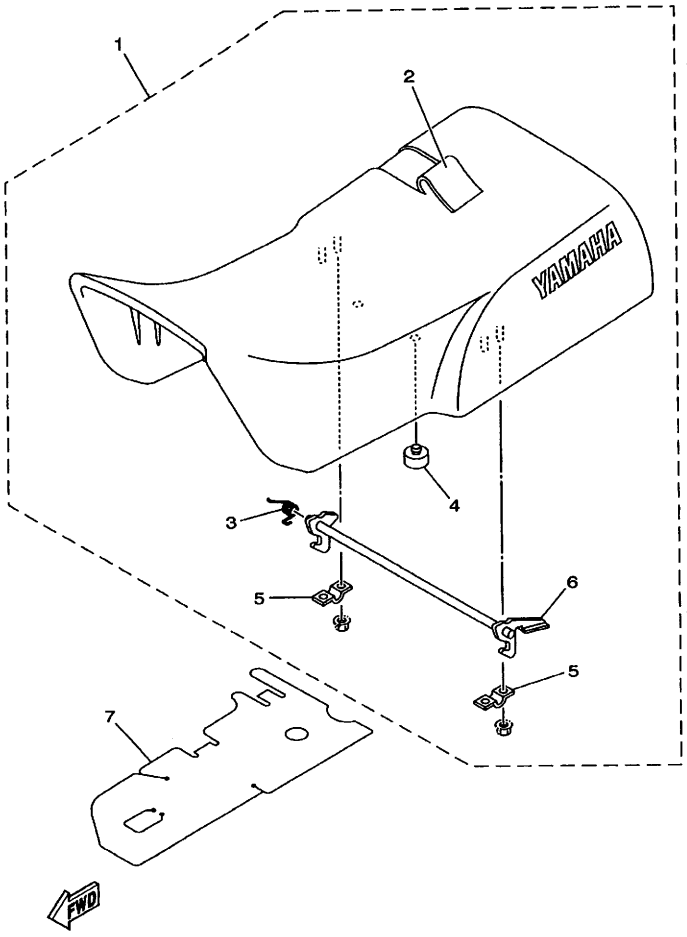

FIG. 29 SEAT

REF. NO.	PART NO.	DESCRIPTION	5GT6	5GT7	5GT9	5GTA		REMARKS
1	4WV-24710-40	SINGLE SEAT ASSY	1	1				
	4WV-24710-A0	SINGLE SEAT ASSY			1	1		
2	4WV-24731-40	.COVER, SEAT	1	1				
	4WV-24731-A0	.COVER, SEAT			1	1		
3	90508-23567	.SPRING, TORSION	1	1	1	1		
4	371-27114-00	.STOPPER, MAIN STAND	2	2	2	2		
5	59V-24775-00	.BRACKET, SEAT LEVER	2	2	2	2		
6	4WV-24776-00	.LEVER, SEAT	1	1	1	1		
7	4WV-2476U-00	PROTECTOR,1	1	1	1	1		

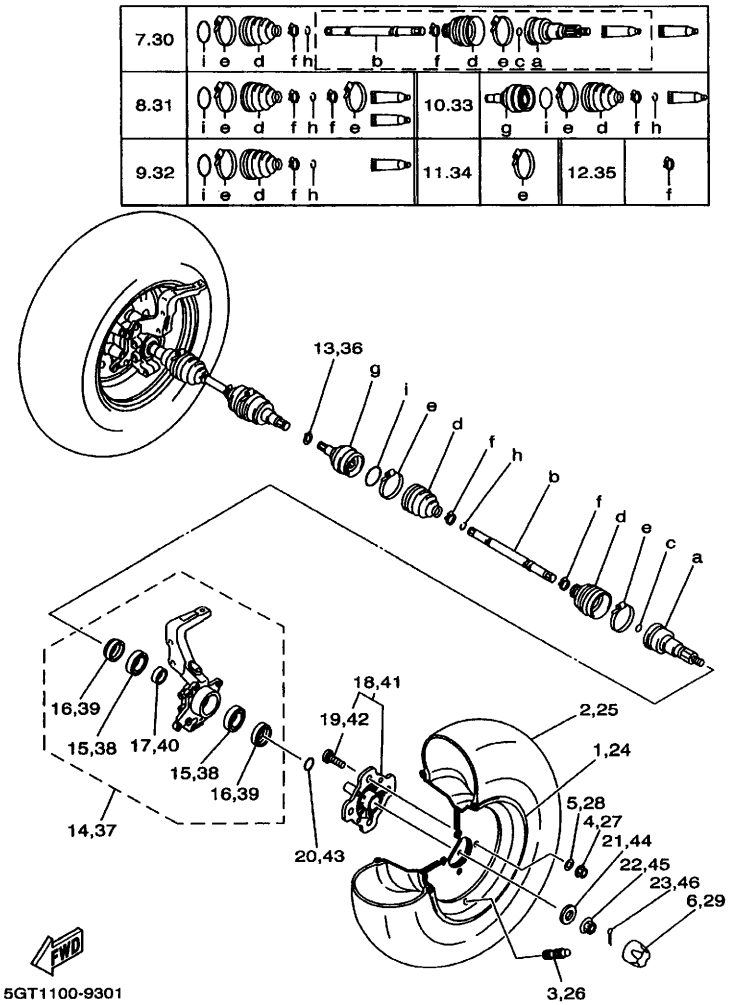

FIG. 30 FRONT WHEEL

REF. NO.	PART NO.	DESCRIPTION	5GT6	5GT7	5GT9	5GTA		REMARKS
1	5GT-25180-20	WHEEL COMP.	1	1				
	5GT-25180-30	WHEEL COMP.			1	1		
2	94108-1215F	TIRE (AT25 X 8 - 12)	1	1	1	1		DUNLOP-KT404A
3	93900-00022	VALVE, RIM	1	1	1	1		TAIHEIYO
4	95707-10500	NUT, FLANGE	4	4	4	4		
5	92907-10200	WASHER, PLAIN	4	4	4	4		
6	5GT-2512A-00	CAP, WHEEL	1	1	1	1		
7	5GT-2510F-00	BALL JOINT SET	1	1	1	1		
8	5GT-2510G-00	BOOT SET (BALL JOINT)	1	1	1	1		
9	5GT-2510H-00	BOOT SET (DOUBLE OFFSET JOINT)	1	1	1	1		
10	5GT-2510J-00	DOUBLE OFF SET JOINT	1	1	1	1		
11	4WV-2511G-00	BOOT BAND (BALL JOINT)	2	2	2	2		
12	4WV-2512G-00	BOOT BAND (SMALL)	2	2	2	2		
13	93450-22119	CIRCLIP	1	1	1	1		
14	5GT-23501-00	STEERING KNUCKLE ASSY (LEFT)	1	1	1	1		
15	93306-00615	.BEARING	2	2	2	2		
16	93102-38417	.OIL SEAL	2	2	2	2		
17	90560-30325	.SPACER	1	1	1	1		
18	5GT-25111-00	HUB, FRONT	1	1	1	1		
19	90114-10011	.BOLT, SERRATION	4	4	4	4		
20	93210-27666	O-RING	1	1	1	1		
21	90201-162L6	WASHER, PLATE	1	1	1	1		
22	90171-16048	NUT, CASTLE	1	1	1	1		
23	91401-30030	PIN, COTTER	1	1	1	1		
24	5GT-25180-20	WHEEL COMP.	1	1				
	5GT-25180-30	WHEEL COMP.			1	1		
25	94108-1215F	TIRE (AT25 X 8 - 12)	1	1	1	1		DUNLOP-KT404A

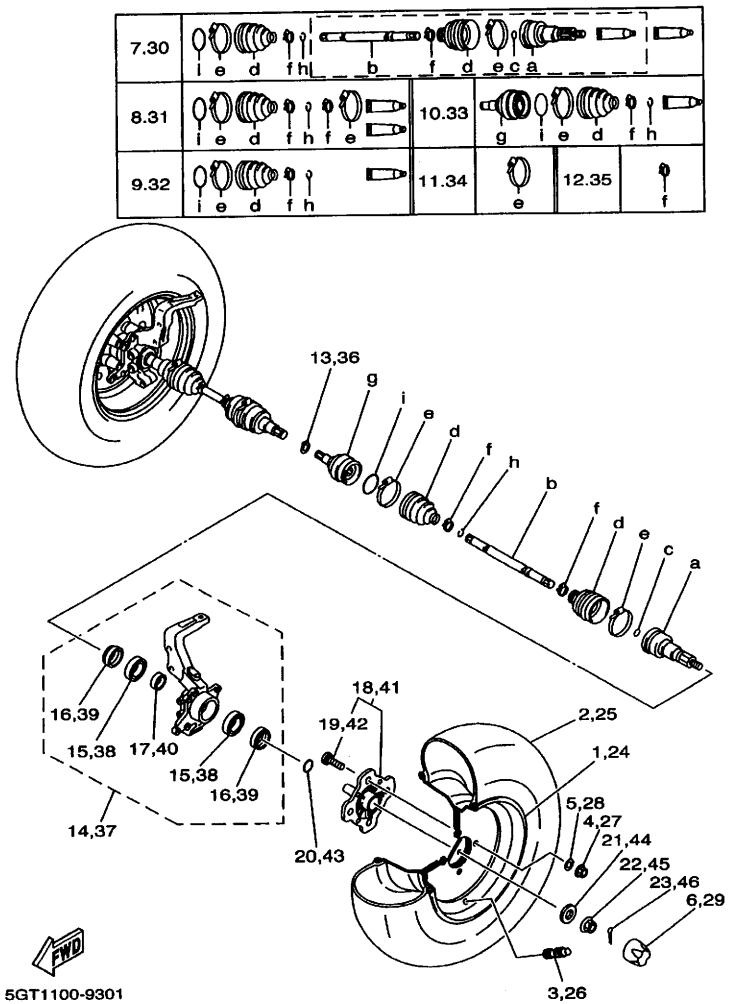

FIG. 30 FRONT WHEEL

REF. NO.	PART NO.	DESCRIPTION	5GT6	5GT7	5GT9	5GTA		REMARKS
26	93900-00022	VALVE, RIM	1	1	1	1		TAIHEIYO
27	95707-10500	NUT, FLANGE	4	4	4	4		
28	92907-10200	WASHER, PLAIN	4	4	4	4		
29	5GT-2512A-00	CAP, WHEEL	1	1	1	1		
30	5GT-2510F-00	BALL JOINT SET	1	1	1	1		
31	5GT-2510G-00	BOOT SET (BALL JOINT)	1	1	1	1		
32	5GT-2510H-00	BOOT SET (DOUBLE OFFSET JOINT)	1	1	1	1		
33	5GT-2510J-00	DOUBLE OFF SET JOINT	1	1	1	1		
34	4WV-2511G-00	BOOT BAND (BALL JOINT)	2	2	2	2		
35	4WV-2512G-00	BOOT BAND (SMALL)	2	2	2	2		
36	93450-22119	CIRCLIP	1	1	1	1		
37	5GT-23502-00	STEERING KNUCKLE ASSY (RIGHT)	1	1	1	1		
38	93306-00615	.BEARING	2	2	2	2		
39	93102-38417	.OIL SEAL	2	2	2	2		
40	90560-30325	.SPACER	1	1	1	1		
41	5GT-25111-00	HUB, FRONT	1	1	1	1		
42	90114-10011	.BOLT, SERRATION	4	4	4	4		
43	93210-27666	O-RING	1	1	1	1		
44	90201-162L6	WASHER, PLATE	1	1	1	1		
45	90171-16048	NUT, CASTLE	1	1	1	1		
46	91401-30030	PIN, COTTER	1	1	1	1		

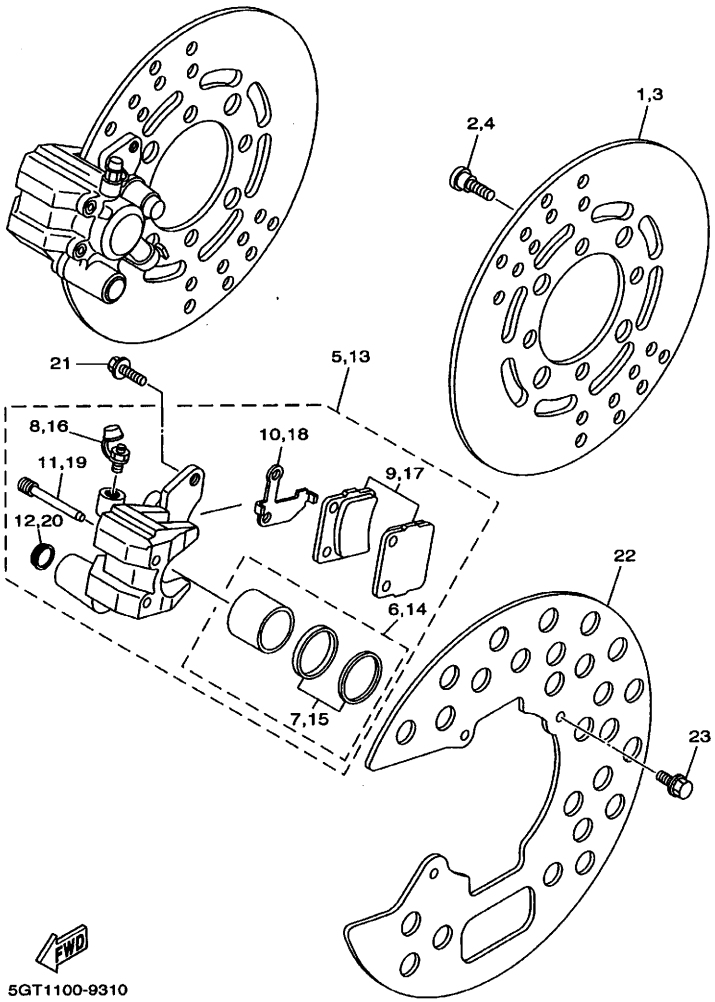

FIG. 31 FRONT BRAKE

REF. NO.	PART NO.	DESCRIPTION	5GT6	5GT7	5GT9	5GTA		REMARKS
1	4WV-2582T-00	DISC, BRAKE	1	1	1	1		
2	90149-08268	SCREW	4	4	4	4		
3	4WV-2582T-00	DISC, BRAKE	1	1	1	1		
4	90149-08268	SCREW	4	4	4	4		
5	4WV-2580T-00	CALIPER ASSY (LEFT)	1	1	1	1		
6	3GD-W0057-00	.PISTON ASSY, CALIPER	1	1	1	1		
7	3GD-W0047-00	..CALIPER SEAL KIT	1	1	1	1		
8	1UY-W0048-50	.BLEED SCREW KIT	1	1	1	1		
9	4WV-W0045-00	.BRAKE PAD KIT	1	1	1	1		
10	3GD-25827-00	.SHIM, CALIPER	1	1	1	1		
11	3GD-25933-00	.PIN, PAD	2	2	2	2		
12	3GD-25916-00	.PLUG	1	1	1	1		
13	4WV-2580U-00	CALIPER ASSY (RIGHT)	1	1	1	1		
14	3GD-W0057-00	.PISTON ASSY, CALIPER	1	1	1	1		
15	3GD-W0047-00	..CALIPER SEAL KIT	1	1	1	1		
16	1UY-W0048-50	.BLEED SCREW KIT	1	1	1	1		
17	4WV-W0045-00	.BRAKE PAD KIT	1	1	1	1		
18	3GD-25828-00	.SHIM, CALIPER	1	1	1	1		
19	3GD-25933-00	.PIN, PAD	2	2	2	2		
20	3GD-25916-00	.PLUG	1	1	1	1		
21	90105-08538	BOLT, WASHER BASED	4	4	4	4		
22	4WV-2514A-01	RING, WHEEL 1 (LEFT)	2	2	2	2		
23	95827-06012	BOLT, FLANGE	6	6	6	6		

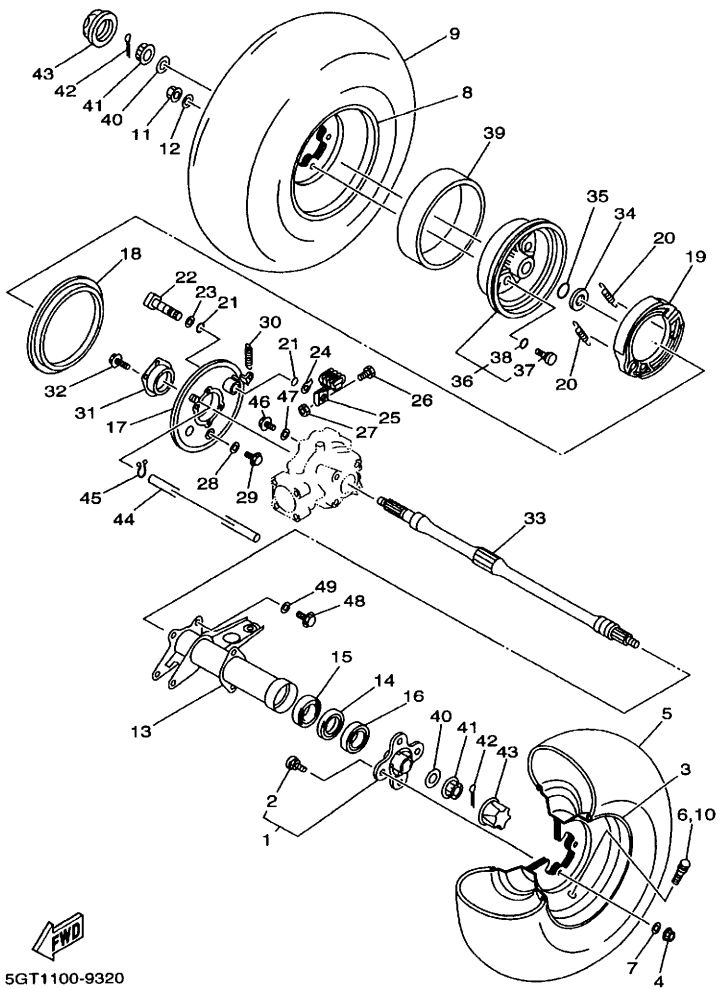

5GT1100-9320

FIG. 32 REAR WHEEL

REF. NO.	PART NO.	DESCRIPTION	5GT6	5GT7	5GT9	5GTA		REMARKS
1	5GT-25383-00	COLLAR, WHEEL	1	1	1	1		
2	90114-10011	.BOLT, SERRATION	4	4	4	4		
3	5GT-25390-20	REAR WHEEL COMP.	1	1				
	5GT-25390-30	REAR WHEEL COMP.			1	1		
4	95707-10500	NUT, FLANGE	4	4	4	4		
5	94110-1215G	TIRE (AT20 X 10 - 12)	1	1	1	1		DUNLOP-KT405G
6	93900-00022	VALVE, RIM	1	1	1	1		TAIHEIYO
7	92907-10200	WASHER, PLAIN	4	4	4	4		
8	5GT-25390-20	REAR WHEEL COMP.	1	1				
	5GT-25390-30	REAR WHEEL COMP.			1	1		
9	94110-1215G	TIRE (AT20 X 10 - 12)	1	1	1	1		DUNLOP-KT405G
10	93900-00022	VALVE, RIM	1	1	1	1		TAIHEIYO
11	95707-10500	NUT, FLANGE	4	4	4	4		
12	92907-10200	WASHER, PLAIN	4	4	4	4		
13	5GT-46540-00	REAR AXLE HOUSING COMP.	1	1	1	1		
14	93306-00805	BEARING	1	1	1	1		
15	93106-47040	OIL SEAL	1	1	1	1		
16	4SH-25367-00	COVER, HUB DUST	1	1	1	1		
17	4GB-25321-00	PLATE, BRAKE SHOE	1	1	1	1		
18	3GH-25129-00	SEAL, PLATE DUST	1	1	1	1		
19	4WV-W2536-01	BRAKE SHOE SET	1	1	1	1		
20	90507-20002	SPRING, TENSION	2	2	2	2		
21	93210-14104	O-RING	2	2	2	2		
22	4WV-25351-00	CAMSHAFT	1	1	1	1		
23	148-25353-00	SHIM, CAMSHAFT	1	1	1	1		
24	3Y6-2533A-01	PLATE, INDICATOR	1	1	1	1		
25	4WV-25355-00	LEVER, CAMSHAFT	1	1	1	1		

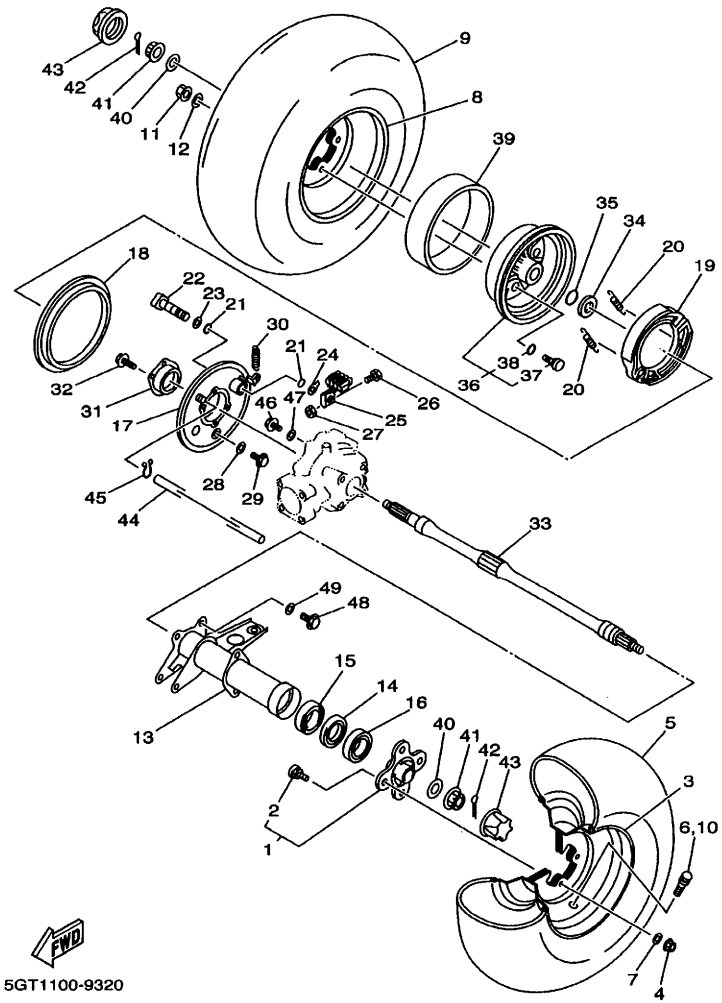

FIG. 32 REAR WHEEL

REF. NO.	PART NO.	DESCRIPTION	5GT6	5GT7	5GT9	5GTA		REMARKS
26	90101-06278	BOLT	1	1	1	1		
27	95307-06600	NUT	1	1	1	1		
28	90201-10118	WASHER, PLATE	1	1	1	1		
29	95027-10016	BOLT, FLANGE	1	1	1	1		
30	90506-16482	SPRING, TENSION	1	1	1	1		
31	4GB-46513-00	RETAINER	1	1	1	1		
32	95817-08040	BOLT, FLANGE	4	4	4	4		
33	5GT-25381-00	AXLE, WHEEL	1	1	1	1		UR
	5GT-25381-10	AXLE, WHEEL	1	1	1	1		UR
34	90387-284T0	COLLAR	1	1	1	1		
35	93210-26606	O-RING	1	1	1	1		
36	5GT-2531E-00	DRUM, BRAKE	1	1	1	1		
37	90114-10003	.BOLT, SERRATION	4	4	4	4		
38	93210-12131	.O-RING	4	4	4	4		
39	5GT-25336-00	RING 2	1	1	1	1		
40	90201-162L6	WASHER, PLATE	2	2	2	2		
41	90171-16048	NUT, CASTLE	2	2	2	2		
42	91401-30030	PIN, COTTER	2	2	2	2		
43	5GT-2512A-00	CAP, WHEEL	2	2	2	2		
44	90445-080K8	HOSE (L1200)	1	1	1	1		
45	90467-08075	CLIP	1	1	1	1		
46	90105-10751	BOLT, WASHER BASED	4	4	4	4		
47	90201-101J1	WASHER, PLATE	4	4	4	4		
48	90105-10751	BOLT, WASHER BASED	4	4	4	4		
49	90201-101J1	WASHER, PLATE	4	4	4	4		

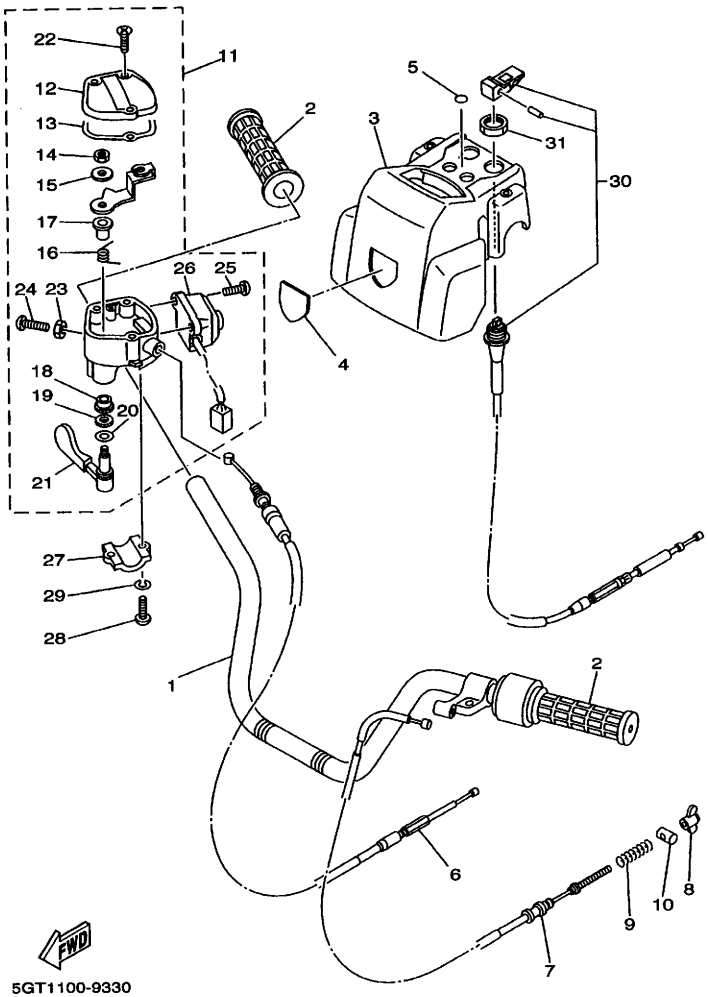

5GT1100-9330

FIG. 33 STEERING HANDLE. CABLE

REF. NO.	PART NO.	DESCRIPTION	5GT6	5GT7	5GT9	5GTA		REMARKS
1	2HR-26111-00	HANDLEBAR	1	1	1	1		
2	3GB-26241-00	GRIP (LEFT)	2	2	2	2		
3	4WV-26124-01	PROTECTOR, HANDLEBAR	1	1	1	1		
4	5FE-26232-00	EMBLEM 3D	1	1	1	1		
5	5GT-2836B-00	TUNING FORK MARK	1	1	1	1		
6	4WV-26311-00	CABLE, THROTTLE 1	1	1	1	1		
7	4WV-26341-00	CABLE, BRAKE	1	1	1	1		
8	20E-26343-00	NUT, ADJUSTING	1	1	1	1		
9	90501-10782	SPRING, COMPRESSION	1	1	1	1		
10	90249-12008	PIN	1	1	1	1		
11	4WV-26250-00	THROTTLE LEVER ASSY	1	1	1	1		
12	4KB-2628F-00	.CAP, GEAR	1	1	1	1		
13	4KB-2628G-00	.GASKET	1	1	1	1		
14	95607-05100	.NUT, U	1	1	1	1		
15	1NV-26398-00	.WASHER	1	1	1	1		
16	1NV-26304-00	.SPRING	1	1	1	1		
17	1NV-26259-01	.COLLAR	1	1	1	1		
18	1NV-2625K-00	.COLLAR	1	1	1	1		
19	93104-09025	.OIL SEAL	1	1	1	1		
20	1NV-26129-00	.WASHER	1	1	1	1		
21	1NV-2625G-01	.LEVER, THROTTLE	1	1	1	1		
22	90149-04278	.SCREW	3	3	3	3		
23	95307-05700	.NUT	1	1	1	1		
24	98507-05020	.SCREW, PAN HEAD	1	1	1	1		
25	97607-04210	.SCREW, PAN HEAD WITH WASHER	2	2	2	2		
26	4WV-83976-00	.SWITCH, HANDLE 1	1	1	1	1		
27	4V4-82913-00	HOLDER, LEVER LOWER 1	1	1	1	1		

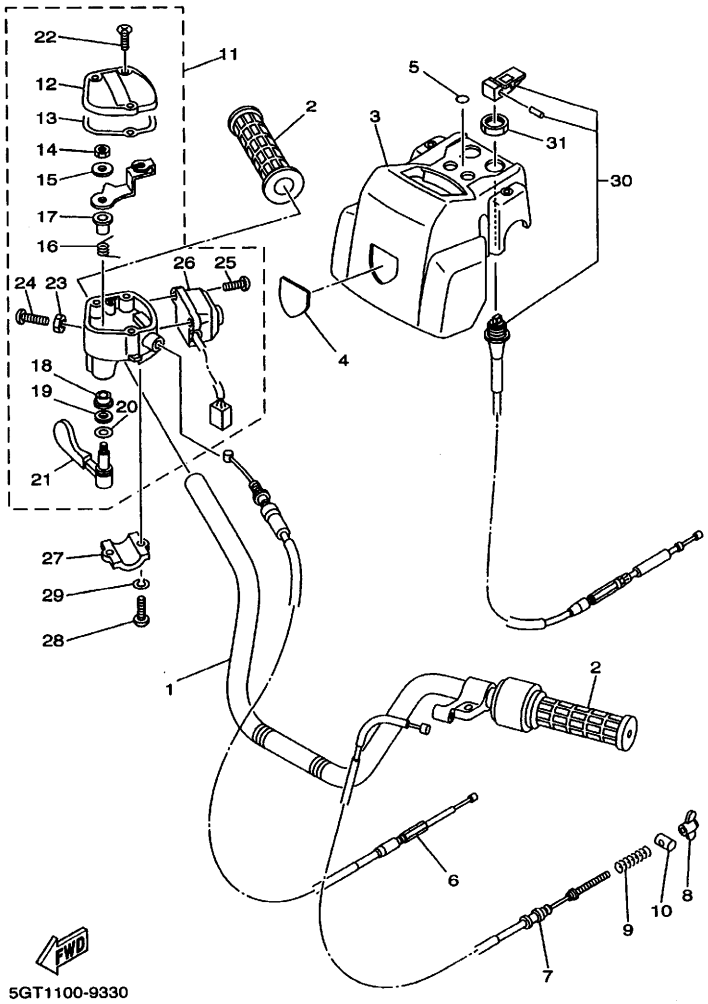

FIG. 33 STEERING HANDLE. CABLE

REF. NO.	PART NO.	DESCRIPTION	5GT6	5GT7	5GT9	5GTA		REMARKS
28	98507-05020	SCREW, PAN HEAD	2	2	2	2		
29	92907-05600	WASHER, PLATE	2	2	2	2		
30	4WV-26331-01	CABLE, STARTER 1	1	1	1	1		
31	8G8-26333-00	NUT	1	1	1	1		

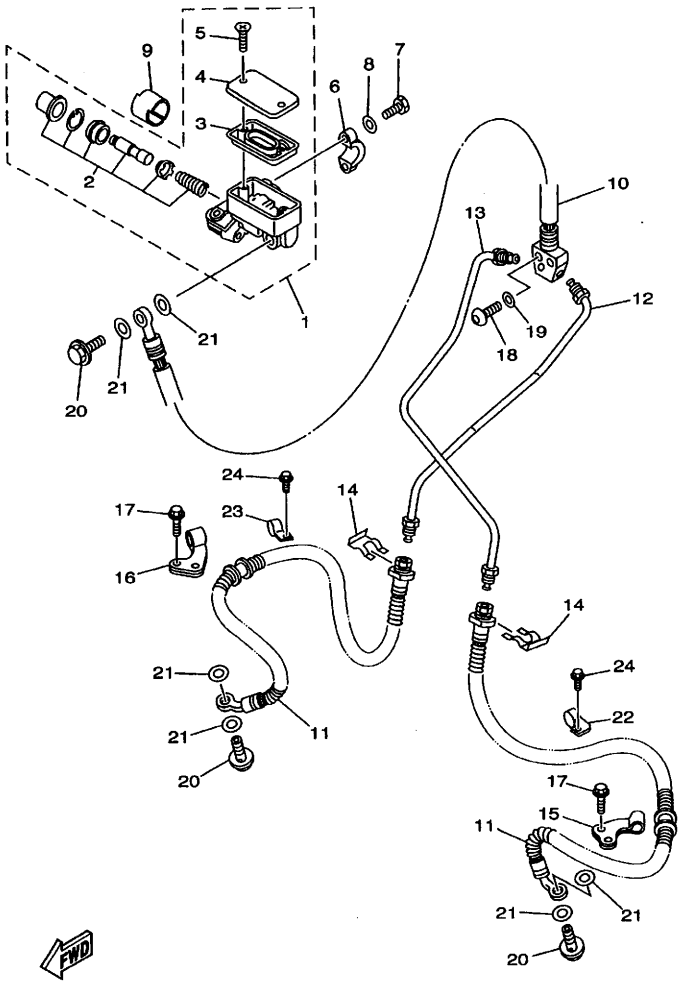

4WV1100-8340

FIG. 34 FRONT MASTER CYLINDER

REF. NO.	PART NO.	DESCRIPTION	5GT6	5GT7	5GT9	5GTA		REMARKS
1	4WV-25870-00	MASTER CYLINDER SUB ASSY	1	1	1	1		
2	4K0-W0041-50	.CYLINDER KIT, MASTER	1	1	1	1		
3	4L0-25854-00	.DIAPHRAGM, RESERVOIR	1	1	1	1		
4	4H7-25852-00	.CAP, RESERVOIR	1	1	1	1		
5	98706-04012	.SCREW, FLAT HEAD	2	2	2	2		
6	56A-25867-00	BRACKET, MASTER CYLINDER	1	1	1	1		
7	97007-06025	BOLT	2	2	2	2		
8	92907-06600	WASHER, PLATE	2	2	2	2		
9	1UY-26259-00	COLLAR	1	1	1	1		
10	4WV-25872-00	HOSE, BRAKE 1	1	1	1	1		
11	4WV-25873-00	HOSE, BRAKE 2	2	2	2	2		
12	4WV-25871-00	PIPE, BRAKE	1	1	1	1		
13	4WV-25882-00	PIPE, BRAKE 2	1	1	1	1		
14	2GU-25866-00	CIRCLIP	2	2	2	2		
15	4GB-25875-00	HOLDER, BRAKE HOSE 1	1	1	1	1		
16	4GB-25876-00	HOLDER, BRAKE HOSE 2	1	1	1	1		
17	95827-06012	BOLT, FLANGE	4	4	4	4		
18	97027-08030	BOLT	2	2	2	2		
19	92907-08600	WASHER, PLATE	2	2	2	2		
20	90401-10159	BOLT, UNION	3	3	3	3		
21	90201-10118	WASHER, PLATE	6	6	6	6		
22	4WV-25875-00	HOLDER, BRAKE HOSE 1	1	1	1	1		
23	4WV-25876-00	HOLDER, BRAKE HOSE 2	1	1	1	1		
24	95827-06012	BOLT, FLANGE	4	4	4	4		

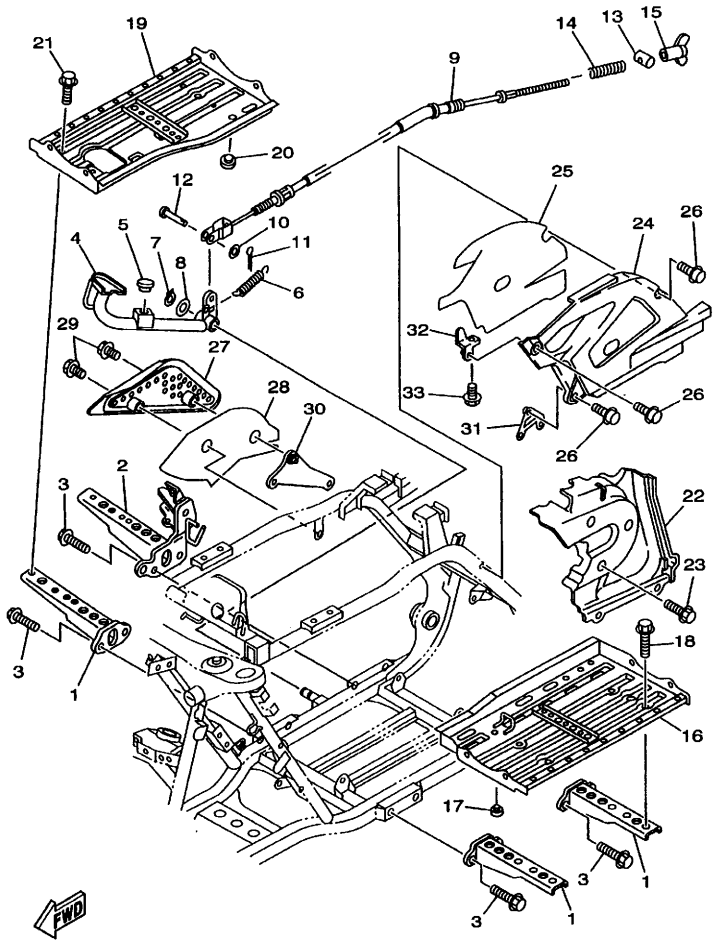

5GT1100-9350

FIG. 35 STAND. FOOTREST

REF. NO.	PART NO.	DESCRIPTION	5GT6	5GT7	5GT9	5GTA		REMARKS
1	5GT-27411-00	FOOTREST 1	3	3	3	3		
2	5GT-27421-00	FOOTREST 2	1	1	1	1		
3	95817-10020	BOLT, FLANGE	8	8	8	8		
4	5GT-27211-00	PEDAL, BRAKE	1	1	1	1		
5	128-27114-00	STOPPER, MAIN STAND	1	1	1	1		
6	90506-18527	SPRING, TENSION	1	1	1	1		
7	93430-12008	CIRCLIP	1	1	1	1		
8	90201-15797	WASHER, PLATE	1	1	1	1		
9	5GT-26351-00	CABLE, BRAKE	1	1	1	1		
10	92907-06200	WASHER	1	1	1	1		
11	91401-20012	PIN, COTTER	1	1	1	1		
12	90240-06076	PIN, CLEVIS	1	1	1	1		
13	90249-12008	PIN	1	1	1	1		
14	90501-10782	SPRING, COMPRESSION	1	1	1	1		
15	20E-26343-00	NUT, ADJUSTING	1	1	1	1		
16	5GT-27481-00	BOARD, FOOTREST	1	1	1	1		
17	128-27114-00	STOPPER, MAIN STAND	1	1	1	1		
18	90119-06108	BOLT, WITH WASHER	4	4	4	4		
19	5GT-27488-00	BOARD, FOOTREST 2	1	1	1	1		
20	128-27114-00	STOPPER, MAIN STAND	1	1	1	1		
21	90119-06108	BOLT, WITH WASHER	4	4	4	4		
22	4WV-27453-00	COVER 1	1	1	1	1		
23	95807-06014	BOLT, FLANGE	3	3	3	3		
24	4WV-27486-00	COVER 1	1	1	1	1		
25	4WV-27496-00	MOLE 1	1	1	1	1		
26	90159-06033	SCREW, WITH WASHER	3	3	3	3		
27	4WV-27463-10	COVER 2	1	1	1	1		

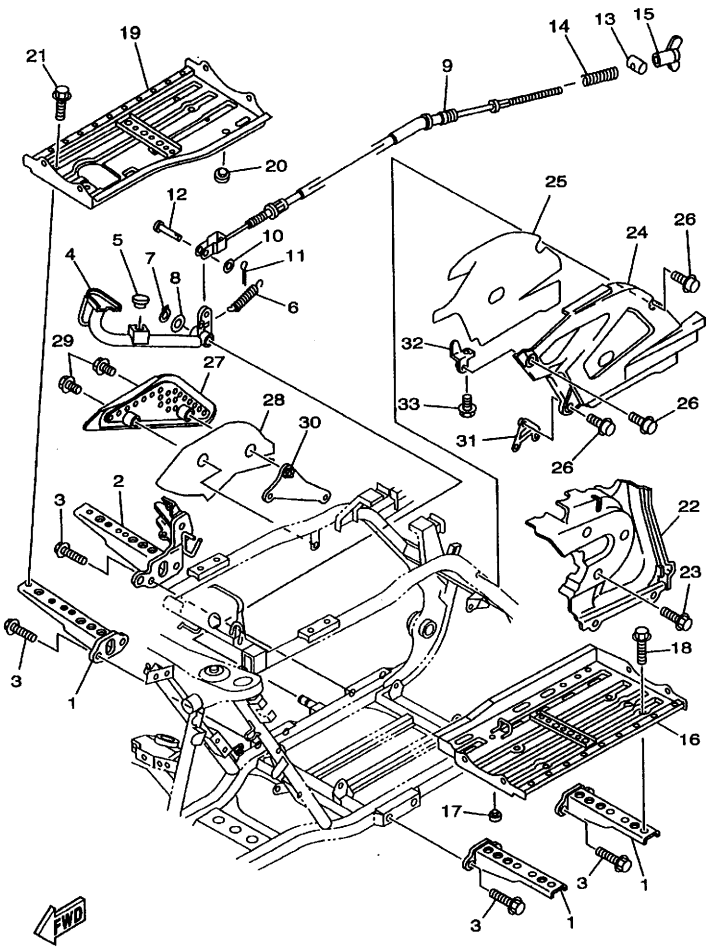

5GT1100-9350

FIG. 35 STAND. FOOTREST

REF. NO.	PART NO.	DESCRIPTION	5GT6	5GT7	5GT9	5GTA		REMARKS
28	4WV-27497-00	MOLE 2	1	1	1	1		
29	90119-06018	BOLT, WITH WASHER	2	2	2	2		
30	4WV-15771-00	STAY 1	1	1	1	1		
31	4WV-15773-00	STAY 3	1	1	1	1		
32	5GT-27412-00	BRACKET, FOOTREST 1	1	1	1	1		
33	95807-06016	BOLT, FLANGE	1	1	1	1		

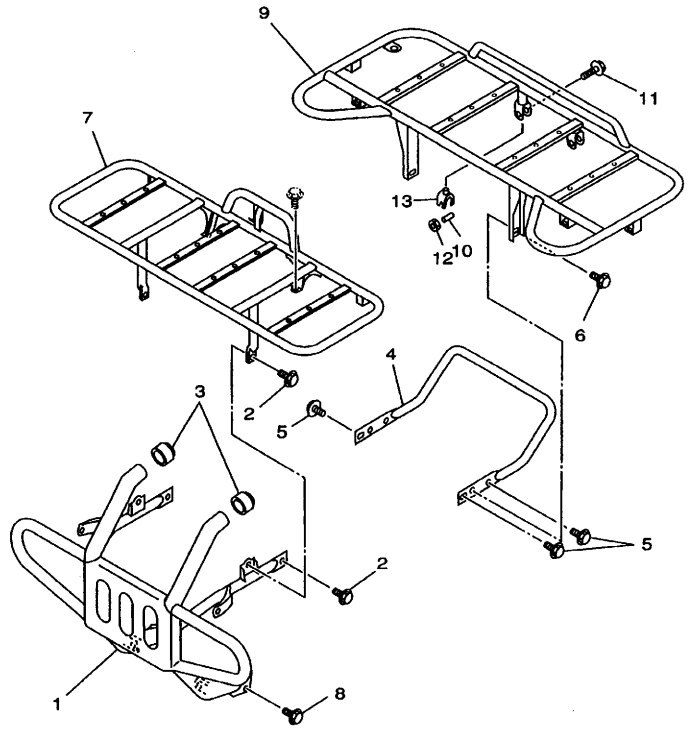

5GT6100-0360

FIG. 36 GUARD

REF. NO.	PART NO.	DESCRIPTION	5GT6	5GT7	5GT9	5GTA		REMARKS
1	5GT-2845N-30	BAR, CARRY FRONT	1	1				
	5GT-2845N-50	BAR, CARRY FRONT			1	1		
2	95817-08016	BOLT, FLANGE	4	4	4	4		
3	2HR-28415-00	DAMPER 1	2	2	2	2		
4	5GT-2845R-00	BAR, CARRY REAR	1	1	1	1		
5	95817-08016	BOLT, FLANGE	3	3	3	3		
6	95817-08020	BOLT, FLANGE	2	2	2	2		
7	5GT-24841-00	CARRIER, FRONT	1	1				
	5GT-24841-20	CARRIER, FRONT			1	1		
8	95817-08016	BOLT, FLANGE	2	2	2	2		
9	5GT-24842-00	CARRIER, REAR	1	1				
	5GT-24842-10	CARRIER, REAR			1	1		
10	90560-06243	SPACER	2	2	2	2		
11	95827-06035	BOLT, FLANGE	2	2	2	2		
12	95607-06100	NUT, U	2	2	2	2		
13	24W-2483H-00	BAND	2	2	2	2		

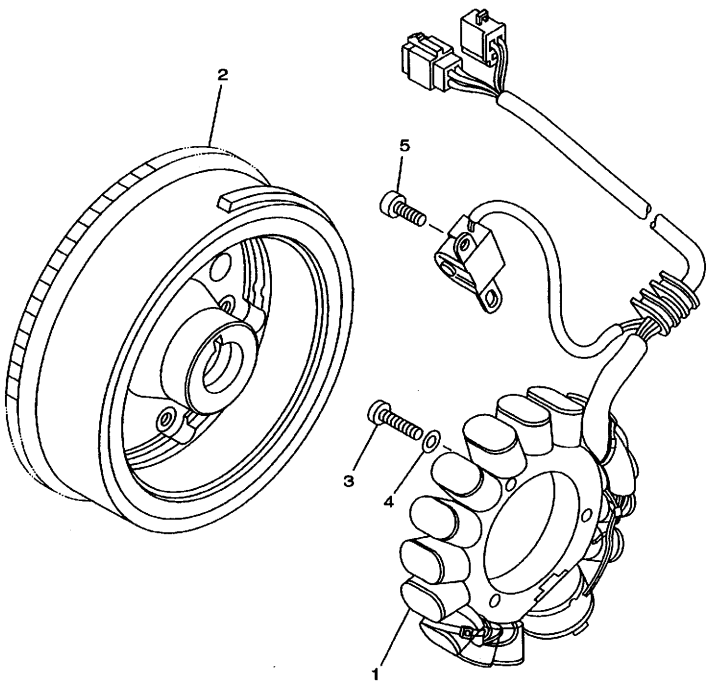

4WV1100-8370

FIG. 37 GENERATOR

REF. NO.	PART NO.	DESCRIPTION	5GT6	5GT7	5GT9	5GTA		REMARKS
1	5GT-85510-00	STATOR ASSY	1	1	1	1		
2	5GT-85550-00	ROTOR ASSY	1	1	1	1		
3	98507-06030	SCREW, PAN HEAD	3	3	3	3		
4	92907-06600	WASHER, PLATE	3	3	3	3		
5	91317-05012	BOLT	2	2	2	2		

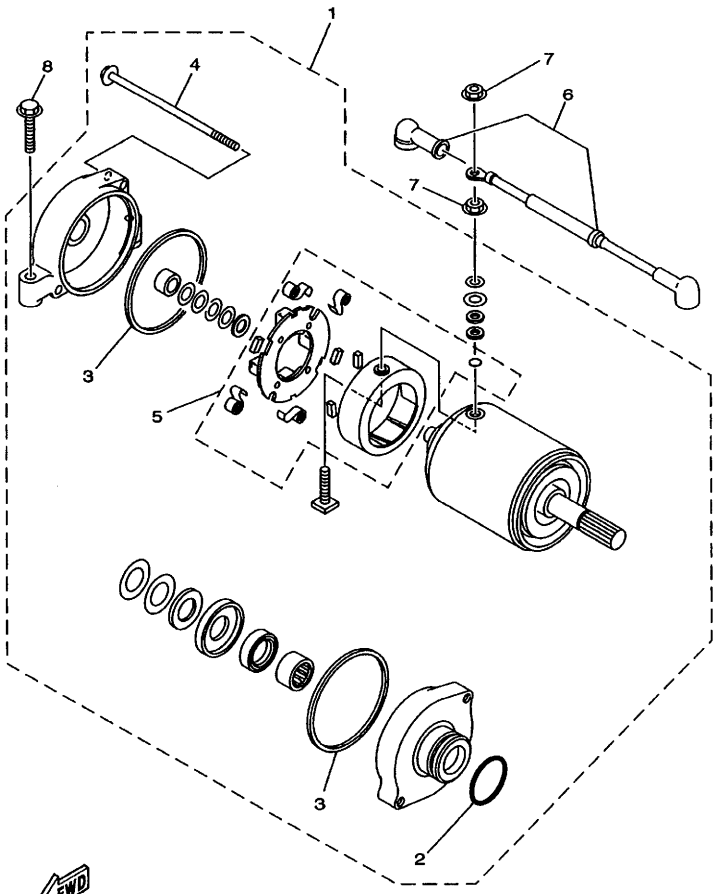

5GT8100-0380

FIG. 38 STARTING MOTOR

REF. NO.	PART NO.	DESCRIPTION	5GT6	5GT7	5GT9	5GTA		REMARKS
1	4WV-81890-00	MOTOR ASSY	1	1	1	1		
2	1FK-81847-00	.O-RING	1	1	1	1		
3	11H-81844-00	.GASKET	2	2	2	2		
4	3AJ-81826-00	.BOLT	2	2	2	2		
5	3AJ-81801-00	.BRUSH SET	1	1	1	1		
6	4WV-81815-00	CORD, STARTER MOTOR	1	1	1	1		
7	4XV-8182A-00	NUT	2	2	2	2		
8	95027-06030	BOLT, FLANGE	2	2	2	2		

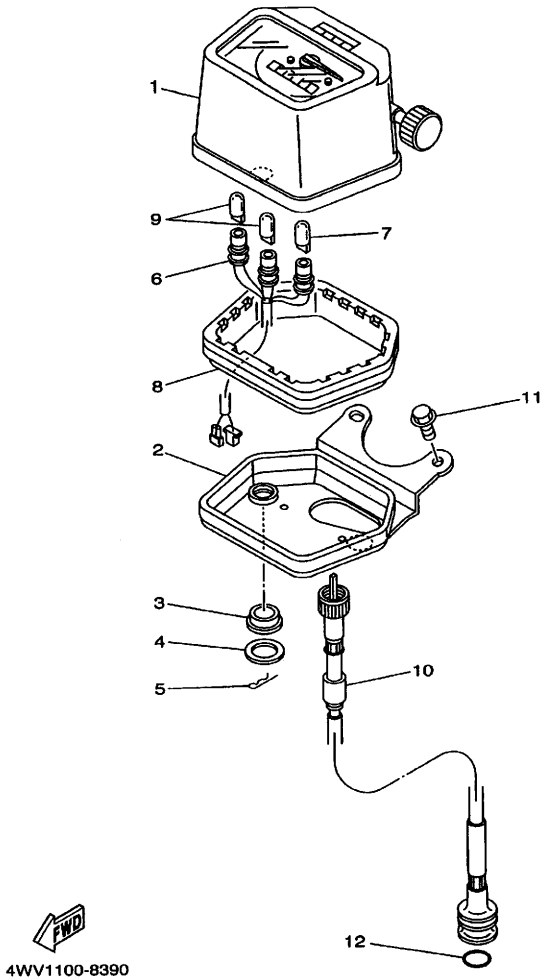

FIG. 39 METER

REF. NO.	PART NO.	DESCRIPTION	5GT6	5GT7	5GT9	5GTA		REMARKS
1	4WV-83570-00	SPEEDOMETER ASSY	1	1	1	1		
2	4GB-83519-00	BRACKET, METER	1	1	1	1		
3	1M1-83526-00	DAMPER 2	2	2	2	2		
4	53Y-83524-00	WASHER, SPECIAL	2	2	2	2		
5	437-83525-00	CLIP	2	2	2	2		
6	4WV-83536-00	SOCKET, METER	1	1	1	1		
7	4R0-83517-00	BULB (12V-3.4W T10)	1	1	1	1		
8	5Y0-83513-00	DAMPER	1	1	1	1		
9	3GM-83517-00	BULB (12V-1.7W)	2	2	2	2		
10	4WV-83550-00	SPEEDOMETER CABLE ASSY	1	1	1	1		
11	95807-06010	BOLT, FLANGE	2	2	2	2		
12	93210-14104	O-RING	1	1	1	1		

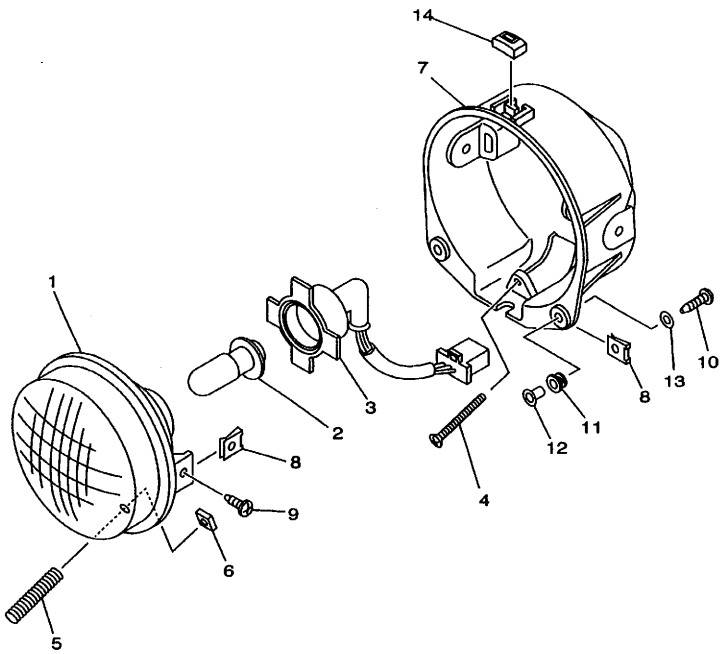

5GT1100-9400

FIG. 40 HEADLIGHT

REF. NO.	PART NO.	DESCRIPTION	5GT6	5GT7	5GT9	5GTA		REMARKS
1	4KB-84314-00	BULB (12V30/30W)	2	2	2	2		
2	4WV-84320-00	LENS ASSY	2	2	2	2		
3	5EH-84340-00	SOCKET CORD ASSY 1	2	2	2	2		
4	98507-03540	SCREW, PAN HEAD	2	2	2	2		
5	2GU-84332-00	SPRING, SCREW	2	2	2	2		
6	2GU-84334-00	NUT, ADJUSTING	2	2	2	2		
7	4WV-84111-01	BODY, HEADLIGHT	2	2	2	2		
8	90183-05042	NUT, SPRING	4	4	4	4		
9	97707-50016	SCREW, TAPPING	4	4	4	4		
10	97707-50025	SCREW, TAPPING	4	4	4	4		
11	90480-12072	GROMMET	4	4	4	4		
12	90387-065J6	COLLAR	4	4	4	4		
13	92907-06200	WASHER	4	4	4	4		
14	5GT-84163-00	DAMPER	2	2	2	2		

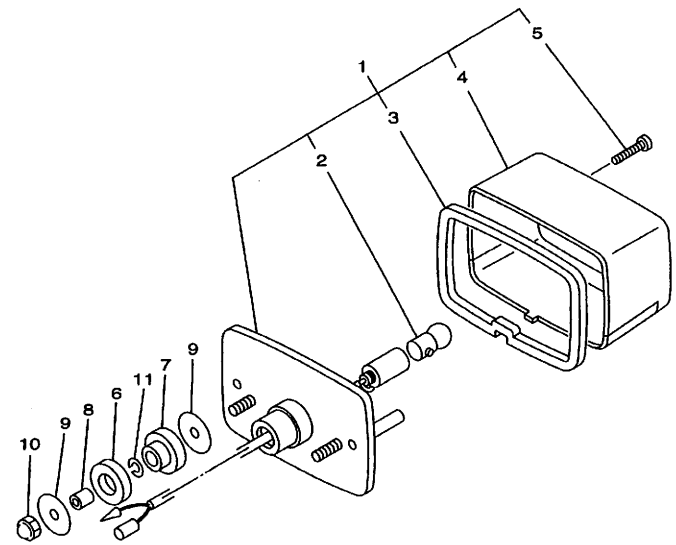

4WV1100-8410

FIG. 41 TAILLIGHT

REF. NO.	PART NO.	DESCRIPTION	5GT6	5GT7	5GT9	5GTA		REMARKS
1	4XE-84710-00	TAILLIGHT UNIT ASSY	1	1	1	1		
2	3GD-84714-00	.BULB (12V-7.5W)	1	1	1	1		
3	1K8-84523-00	.GASKET, LENS	1	1	1	1		
4	3L6-84521-00	.LENS, TAILLIGHT	1	1	1	1		
5	2E9-84524-00	.SCREW, LENS FITTING	2	2	2	2		
6	90202-14077	WASHER, PLATE	2	2	2	2		
7	90480-14088	GROMMET	2	2	2	2		
8	90387-06299	COLLAR	2	2	2	2		
9	90201-06074	WASHER, PLATE	4	4	4	4		
10	95307-06800	NUT	2	2	2	2		
11	90201-155G5	WASHER, PLATE	2	2	2	2		

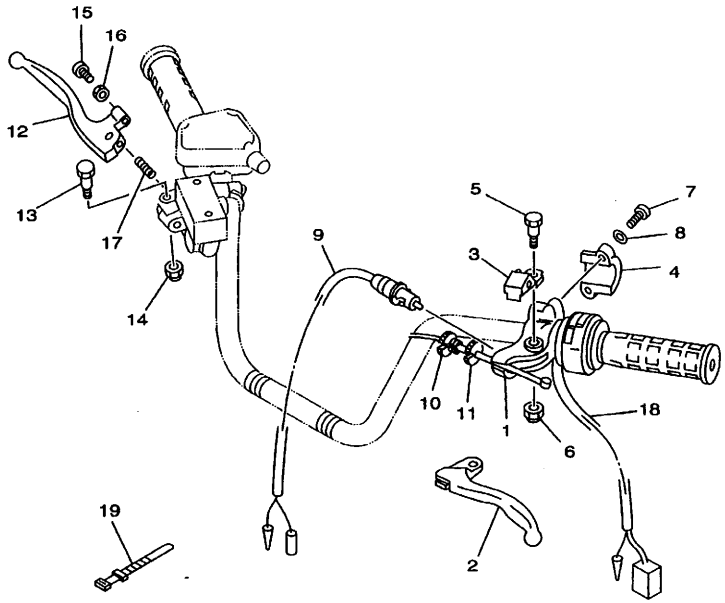

5GT1100-9430

FIG. 42 HANDLE SWITCH. LEVER

REF. NO.	PART NO.	DESCRIPTION	5GT6	5GT7	5GT9	5GTA		REMARKS
1	1YW-82911-01	HOLDER, LEVER 1	1	1	1	1		
2	2HT-83912-00	LEVER 1	1	1				
	3FA-83912-00	LEVER 1			1	1		
3	1YW-83965-00	LEVER, LOCK	1	1	1	1		
4	2XJ-82913-00	HOLDER, LEVER LOWER 1	1	1	1	1		
5	90109-06576	BOLT	1	1	1	1		
6	95607-06100	NUT, U	1	1	1	1		
7	98507-06020	SCREW, PAN HEAD	2	2	2	2		
8	92907-06100	WASHER, SPRING	2	2	2	2		
9	1YW-83980-00	FRONT STOP SWITCH ASSY	1	1	1	1		
10	90123-08046	BOLT	1	1	1	1		
11	90179-08148	NUT	1	1	1	1		
12	1RX-83922-01	LEVER 2			1	1		
	38W-83922-00	LEVER 2	1	1				
13	90109-06577	BOLT	1	1	1	1		
14	95607-06100	NUT, U	1	1	1	1		
15	90149-06131	SCREW	1	1	1	1		
16	90170-06010	NUT	1	1	1	1		
17	90501-10312	SPRING, COMPRESSION	1	1	1	1		
18	4GB-83973-00	SWITCH, HANDLE 3	1	1	1	1		
19	437-83936-01	BAND, SWITCH CORD	4	4	4	4		

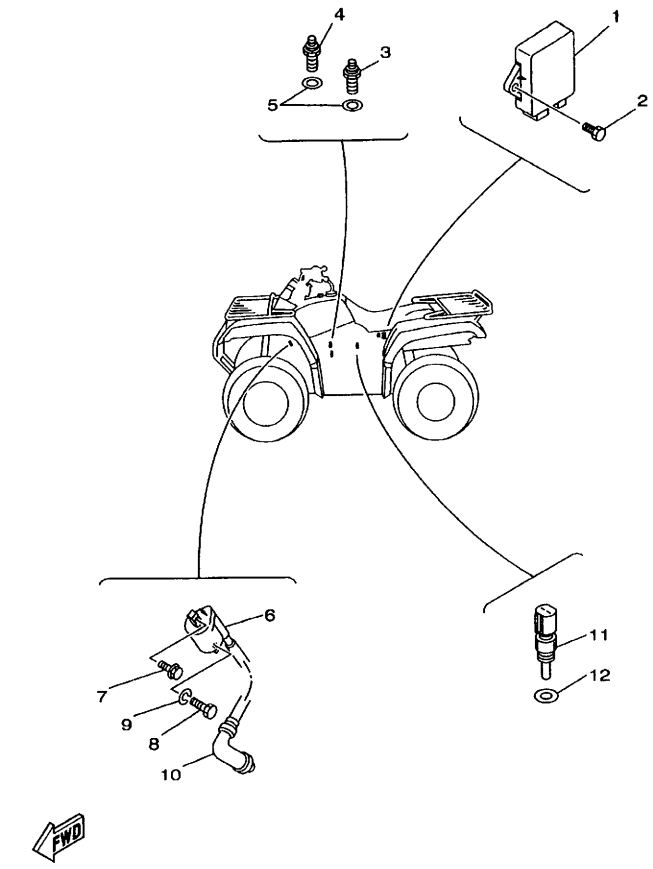

FIG. 43 ELECTRICAL 1

REF. NO.	PART NO.	DESCRIPTION	5GT6	5GT7	5GT9	5GTA		REMARKS
1	5GT-85540-00	C.D.I. UNIT ASSY	1	1	1	1		
2	98907-06016	SCREW, BIND	2	2	2	2		
3	3GB-82540-01	NEUTRAL SWITCH ASSY	1	1	1	1		
4	4KM-82540-00	NEUTRAL SWITCH ASSY	1	1	1	1		
5	90430-10148	GASKET	2	2	2	2		
6	4KJ-82310-10	IGNITION COIL ASSY	1	1	1	1		
7	90109-06723	BOLT	1	1	1	1		
8	97007-06020	BOLT	1	1	1	1		
9	92907-06600	WASHER, PLATE	1	1	1	1		
10	371-82370-00	PLUG CAP ASSY	1	1	1	1		
11	4GB-83591-10	THERMO UNIT	1	1	1	1		
12	90201-12172	WASHER, PLATE	1	1	1	1		

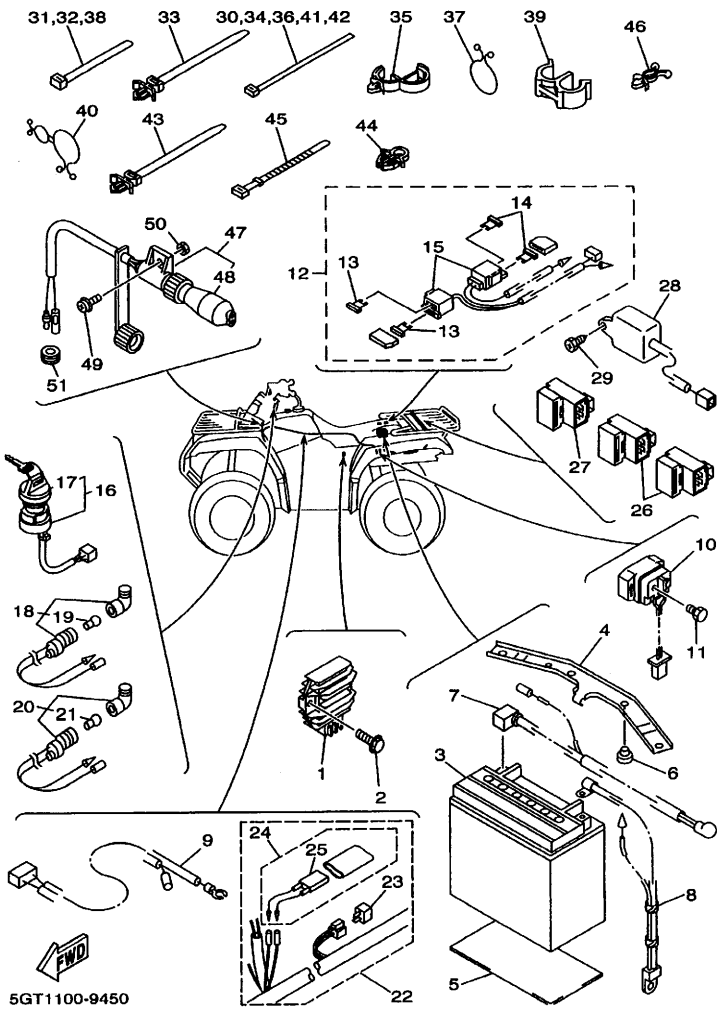

FIG. 44 ELECTRICAL 2

REF. NO.	PART NO.	DESCRIPTION	5GT6	5GT7	5GT9	5GTA		REMARKS
1	5GT-81960-00	RECTIFIER & REGULATOR ASSY	1	1	1	1		
2	95807-06020	BOLT, FLANGE	2	2	2	2		
3	4SH-82100-21	BATTERY ASSY (YTX20L-BS)	1	1	1	1		
4	4WV-82128-00	BRACKET, BATTERY	1	1	1	1		
5	4BD-21639-00	DAMPER 2	1	1	1	1		
6	278-27114-00	STOPPER, MAIN STAND	2	2	2	2		
7	4WV-82115-00	WIRE, PLUS LEAD	1	1	1	1		
8	4WV-82116-00	WIRE, MINUS LEAD	1	1	1	1		
9	4WV-82541-00	WIRE, LEAD	1	1	1	1		
10	5GT-81940-00	STARTER RELAY ASSY	1	1	1	1		
11	95027-06008	BOLT, FLANGE	2	2	2	2		
12	5GT-82150-00	FUSE HOLDER ASSY	1	1	1	1		
13	2GV-82151-00	.FUSE (20A-BL)	2	2	2	2		
14	42X-82151-00	.FUSE (10A-BL)	2	2	2	2		
15	4KL-82155-00	.BAND	2	2	2	2		
16	4GB-82510-10	MAIN SWITCH ASSY	1	1	1	1		
17	3HN-82579-00	.CAP, KEY	1	1	1	1		
18	2HR-83530-01	PILOT LIGHT ASSY	1	1	1	1		
19	123-83516-21	.BULB (12V-3.4W)	1	1	1	1		
20	24W-83530-01	PILOT LIGHT ASSY	1	1	1	1		GREEN
21	123-83516-21	.BULB (12V-3.4W)	1	1	1	1		
22	5GT-82590-00	WIRE HARNESS ASSY	1	1	1	1		
23	3WP-81980-00	.DIODE ASSY	1	1	1	1		
24	5GT-82180-00	.CIRCUIT BREAKER ASSY	1	1	1	1		
25	5GT-82560-00	..THERMO SWITCH ASSY	1	1	1	1		UR
26	29U-81950-93	RELAY ASSY	2	2	2	2		
27	2NL-81950-92	RELAY ASSY	1	1	1	1		

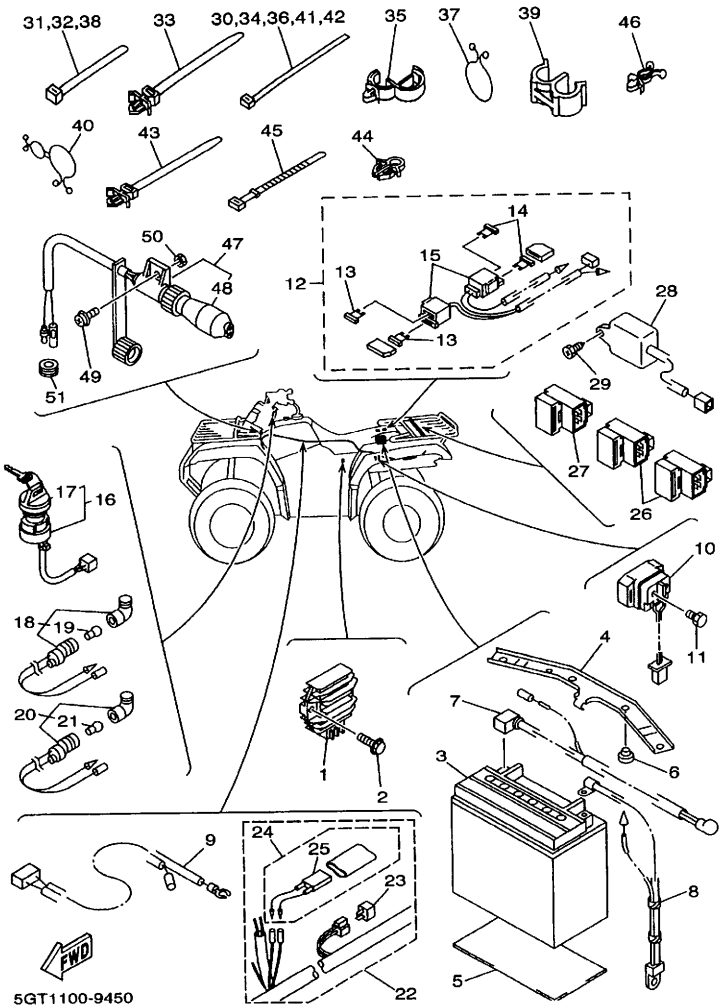

FIG. 44 ELECTRICAL 2

REF. NO.	PART NO.	DESCRIPTION	5GT6	5GT7	5GT9	5GTA		REMARKS
28	4SH-86510-00	MOTOR CONTROL UNIT ASSY	1	1	1	1		
29	98907-06016	SCREW, BIND	1	1	1	1		
30	1UA-82591-00	BAND	1	1				
	1UA-82591-00	BAND			4	4		
31	90464-13073	CLAMP	2	2	2	2		
32	90464-13073	CLAMP			1	1		
	90464-13073	CLAMP	2	2				
33	90464-12036	CLAMP	1	1	1	1		
34	1UA-82591-00	BAND	1	1	1	1		
35	90464-07209	CLAMP	1	1	1	1		
36	1UA-82591-00	BAND	1	1				
	1UA-82591-00	BAND			2	2		
37	90464-30040	CLAMP	1	1	1	1		
38	90464-13073	CLAMP			1	1		
	90464-13073	CLAMP	2	2				
39	90468-15139	CLIP	1	1	1	1		
40	90464-25098	CLAMP	1	1	1	1		
41	1UA-82591-00	BAND	1	1	1	1		
42	1UA-82591-00	BAND	1	1	1	1		
43	90464-10112	CLAMP	1	1	1	1		
44	90464-48174	CLAMP	1	1	1	1		
45	90464-20094	CLAMP	1	1	1	1		
46	90464-20159	CLAMP	2	2	2	2		
47	59V-81920-00	TERMINAL ASSY	1	1	1	1		
48	59V-81942-00	.COVER	1	1	1	1		
49	90159-05018	SCREW, WITH WASHER	1	1	1	1		
50	95707-05500	NUT, FLANGE	1	1	1	1		

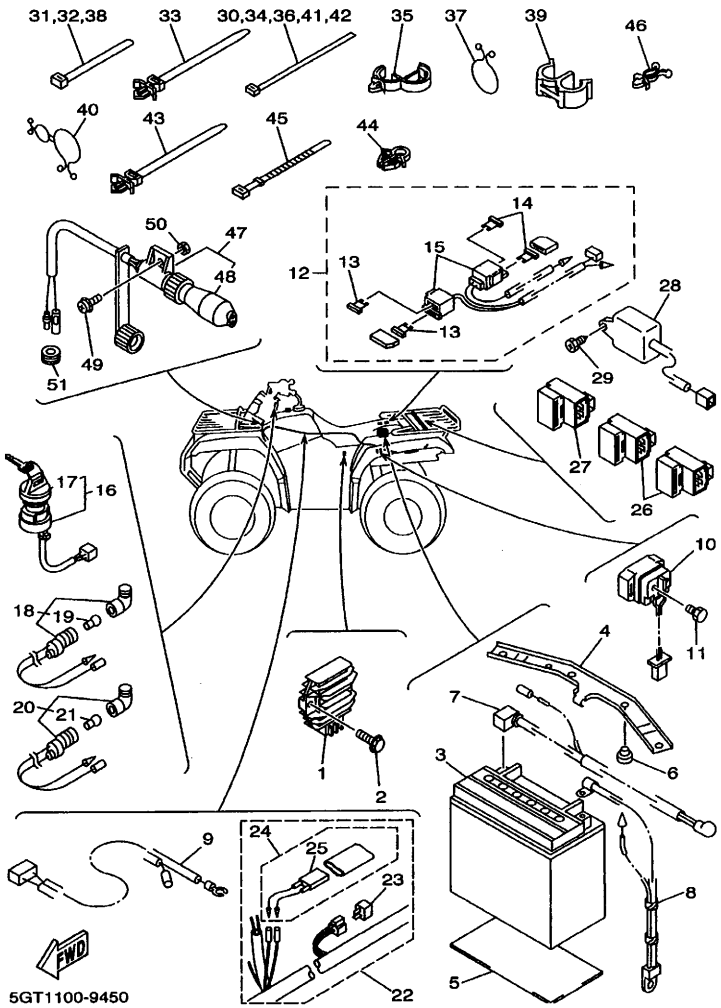

FIG. 44 ELECTRICAL 2

REF. NO.	PART NO.	DESCRIPTION	5GT6	5GT7	5GT9	5GTA		REMARKS
51	90480-10297	GROMMET	1	1	1	1		

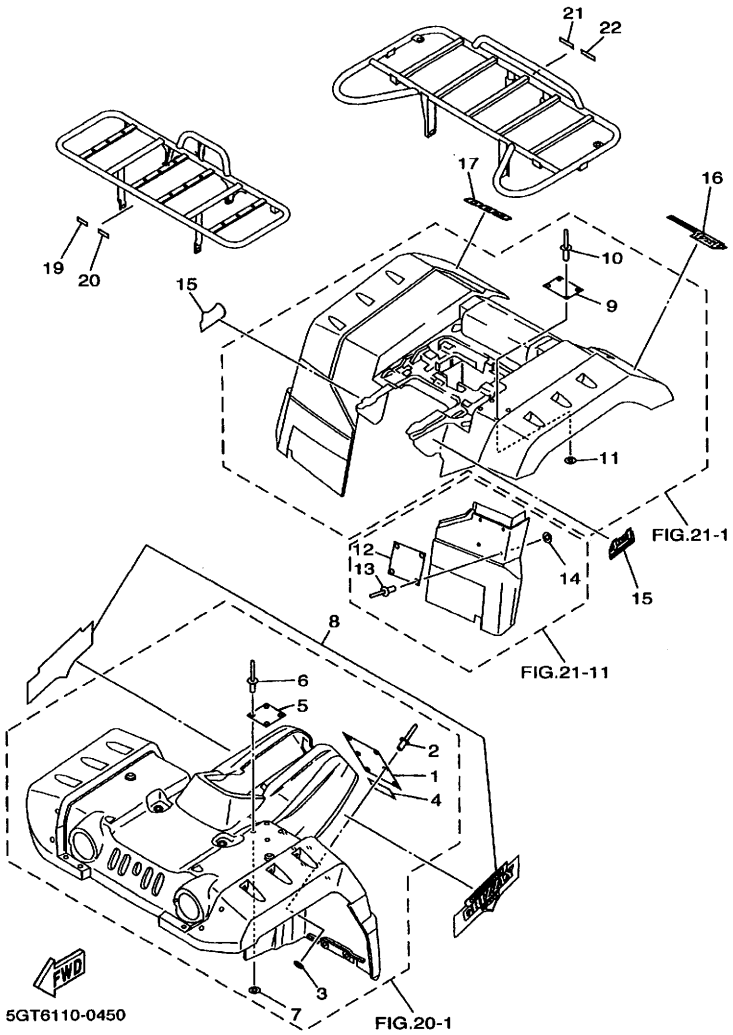

FIG. 45 EMBLEM.LABEL 1

REF. NO.	PART NO.	DESCRIPTION	5GT6	5GT7	5GT9	5GTA		REMARKS
1	5FE-21568-01	LABEL, WARNING	1	1	1	1		
2	90267-32109	RIVET, BLIND	6	6	6	6		
3	90201-03313	WASHER, PLATE	6	6	6	6		
4	4WV-2151E-00	LABEL 2	1	1	1	1		
5	5FE-21697-01	LABEL, CAUTION 2	1	1	1	1		
6	90267-32109	RIVET, BLIND	4	4	4	4		
7	90201-03313	WASHER, PLATE	4	4	4	4		
8	5GT-21570-40	GRAPHIC SET, FRONT FENDER			1	1		
	5GT-21570-50	GRAPHIC SET, FRONT FENDER	1	1				UR FOR PDG
	5GT-21570-60	GRAPHIC SET, FRONT FENDER	1	1				UR FOR RTR
	5GT-21570-70	GRAPHIC SET, FRONT FENDER	1	1				UR FOR DNYS1
9	5FE-2151H-01	LABEL 5	1	1	1	1		
10	90267-32109	RIVET, BLIND	4	4	4	4		
11	90201-03313	WASHER, PLATE	4	4	4	4		
12	5GT-21696-00	LABEL, CAUTION	1	1	1	1		
13	90267-32109	RIVET, BLIND	4	4	4	4		
14	90201-03313	WASHER, PLATE	4	4	4	4		
15	5GH-2163G-00	EMBLEM 1	2	2	2	2		UR FOR PDG
	5GH-2163G-10	EMBLEM 1	2	2				UR FOR RTR
	5GH-2163G-20	EMBLEM 1	2	2				UR FOR DNYS1
16	5GT-2165G-00	GRAPHIC, REAR (L.H)	1	1	1	1		
17	5GT-2165H-00	GRAPHIC, REAR (R.H)	1	1	1	1		
18	3FA-2819R-00	TAG, WARNING	1	1	1	1		
19	3MX-24875-A0	LABEL 1	1	1	1	1		ENGLISH
20	3GC-24877-A0	LABEL, CAUTION	1	1	1	1		
21	3MX-24875-A0	LABEL 1	1	1	1	1		ENGLISH
22	4WV-24877-A0	LABEL, CAUTION	1	1	1	1		

NUMERICAL INDEX

PARTNO.	REF. NO.
4K0-W0041-50	34 - 2
4WV-W0045-00	31 - 9
	31 - 17
3GD-W0047-00	31 - 7
	31 - 15
1UY-W0048-50	31 - 8
	31 - 16
3GD-W0057-00	31 - 6
	31 - 14
5GT-W1141-00	3 - 2
5GT-W1142-00	3 - 3
4WV-W2151-01	20 - 1
4WV-W2151-11	20 - 1
4WV-W2151-21	20 - 1
4WV-W2161-01	21 - 1
4WV-W2161-11	21 - 1
4WV-W2161-21	21 - 1
5GT-W2168-00	21 - 11
4WV-W2536-01	32 - 19
5GT-Y1754-00	16 - 6
5GT-Y4612-00	23 - 7
3TB-11101-02	1 - 1
4H7-11133-10	1 - 2
4WV-11166-00	11 - 17
2KF-11181-01	2 - 12
1L9-11186-00	1 - 18
5Y1-11187-00	1 - 20
214-11198-01	11 - 14
	23 - 16
	24 - 40
3TB-11310-00	2 - 1
1VJ-11351-00	2 - 3
5GT-11400-00	3 - 1
5GT-11500-00	3 - 16
34L-11610-00	3 - 13
34L-11610-20	3 - 13
34L-11610-40	3 - 13
3TB-11631-00-Y0	3 - 12
1JK-11633-01	3 - 14
3TB-11636-00	3 - 12
3TB-11638-00	3 - 12
5GT-11651-00	3 - 6
4WV-11681-10	3 - 4
4WV-12111-00	4 - 1
5Y1-12113-00	4 - 3
5Y1-12114-00	4 - 4
4H7-12116-00	4 - 5
2F3-12117-00	4 - 7

PARTNO.	REF. NO.
1J7-12118-00	4 - 8
1J7-12119-01	4 - 6
4WV-12121-00	4 - 2
2NX-12146-00	4 - 13
34K-12151-00	4 - 9
2NX-12156-00	4 - 14
2NX-12159-00	4 - 18
34K-12161-00	4 - 10
4WV-12162-00	4 - 11
34K-12163-00	4 - 12
2NX-12166-00	4 - 15
4WV-12170-00	5 - 1
3YF-12176-00	5 - 5
3TB-12210-00	5 - 15
4DW-12213-00	5 - 17
3TB-12215-01	1 - 23
3YF-12216-00	5 - 8
34K-12231-00	5 - 12
4WV-12233-00	5 - 9
34K-12241-00	5 - 13
3YF-12247-00	5 - 7
3YF-12284-00	5 - 2
4WV-12288-00	5 - 6
3YF-12290-00	5 - 4
4SH-12405-00	6 - 1
4SH-12611-00	6 - 2
33M-12671-00	6 - 3
4WV-13161-00	7 - 23
4WV-1319K-00	7 - 35
5GT-13300-00	7 - 1
5GT-13325-00	7 - 6
4WV-13329-00	7 - 4
4WV-13411-00	7 - 2
51Y-13411-00	7 - 9
4WV-13416-00	7 - 8
4X7-13440-01	7 - 13
4WV-13446-00	7 - 37
583-13447-01	7 - 14
5GT-13464-00	7 - 19
5GT-13465-00	7 - 20
3HN-13470-00	7 - 26
25G-13490-00	7 - 33
4WV-13586-00	8 - 1
4WV-13596-00	8 - 5
4WV-1410A-00	9 - 20
4WV-14103-00	9 - 29
4WV-14105-01	9 - 18
87M-14137-00	9 - 23

PARTNO.	REF. NO.
4HR-14142-42	9 - 19
4WV-14147-10	9 - 17
4WV-14147-20	9 - 5
1UY-14155-00	9 - 28
522-14161-00	9 - 27
239-14172-07	9 - 13
4WV-14190-28	9 - 11
12R-14191-00	9 - 21
24W-14193-00	8 - 9
4WV-14193-00	9 - 15
4WV-14197-00	9 - 22
620-1423E-57	9 - 7
620-14231-29	9 - 7
4WV-14272-00	9 - 4
4WV-14349-00	8 - 8
1UY-14411-01	8 - 11
1UY-14412-01	8 - 15
31A-14419-00	8 - 23
4WV-1442F-01	8 - 25
4WV-14437-00	8 - 22
1UY-14451-00	8 - 14
4WV-14453-00	8 - 21
10M-14457-00	8 - 16
59V-14457-00	8 - 19
1UY-14458-01	8 - 12
4X7-14467-01	8 - 7
1UY-14468-00	8 - 13
5GT-14611-00	10 - 1
3YF-14613-01	10 - 23
4WV-14628-00	10 - 2
4WV-1465R-01	10 - 3
4WV-1465T-01	10 - 11
5GT-14711-00	10 - 6
5GT-14718-00	10 - 14
4WV-14728-01	10 - 10
4WV-14752-00	10 - 16
3YF-14755-00	10 - 9
4WV-1490J-00	9 - 8
4WV-1490J-10	9 - 8
4WV-14901-00	9 - 1
4WV-14901-10	9 - 1
4WV-14918-00	9 - 6
4WV-14933-00	9 - 3
4WV-14940-00	9 - 26
4WV-14941-90	9 - 9
4WV-14985-00	9 - 10
4WV-14996-00	9 - 14
4WV-15100-12	11 - 1

PARTNO.	REF. NO.
4WV-15113-00	12 - 5
4WV-15163-00	11 - 20
5GT-15191-00	11 - 30
4WV-15316-00	12 - 47
4WV-15326-00	12 - 42
4WV-15327-00	11 - 10
4WV-15333-00	11 - 28
4WV-15335-00	12 - 25
4HC-15351-00	7 - 11
2H7-15361-00	11 - 3
3F9-15362-00	11 - 11
2N4-15371-00	23 - 17
	24 - 38
4WV-15381-00	12 - 18
11H-15383-01	16 - 3
5GT-15383-00	11 - 21
4WV-15388-00	11 - 15
4WV-15411-00	12 - 1
4WV-15431-02	12 - 13
5GH-15443-00	13 - 13
4WV-15451-00	12 - 2
4WV-15462-00	12 - 20
4WV-15463-00	11 - 25
4WV-15471-00	12 - 23
4WV-15472-00	12 - 33
4WV-15473-01	12 - 28
4WV-15474-00	12 - 26
4WV-15475-02	12 - 31
5GT-15477-00	12 - 32
4WV-15491-00	12 - 46
4WV-15494-01	12 - 29
4WV-15495-00	12 - 27
4WV-15496-00	12 - 24
4WV-15498-01	12 - 30
4WV-15499-00	12 - 41
4WV-15650-02	13 - 1
5GT-15710-00	13 - 3
21V-15713-00	13 - 5
24W-15714-00	13 - 12
21V-15715-00	13 - 6
1UY-15716-00	13 - 14
1UY-15719-00	12 - 9
1UY-15723-00	13 - 15
21V-15741-00	13 - 4
21V-15751-00	13 - 9
3X3-15755-00	13 - 10
21V-15767-00	13 - 7
4WV-15771-00	35 - 30

PARTNO.	REF. NO.
4WV-15773-00	35 - 31
21V-15779-00	13 - 11
5GT-16611-00	14 - 1
5GT-16620-00	14 - 2
4WV-16626-00	14 - 3
4SH-16664-00	14 - 4
5GT-17223-00	15 - 10
5GT-17233-00	15 - 16
4WV-17243-00	15 - 28
5GT-17253-00	15 - 20
5GT-17285-00	15 - 13
5GT-17286-00	15 - 23
5GT-17421-00	15 - 7
4WV-17432-00	15 - 27
4WV-17521-01	16 - 1
5GT-17523-00	15 - 32
4VR-17527-00	16 - 22
4KB-17531-00	16 - 20
4KB-17531-10	16 - 20
4KB-17531-20	16 - 20
4KB-17531-30	16 - 20
4KB-17531-40	16 - 20
4KB-17531-50	16 - 20
4KB-17531-60	16 - 20
52G-17531-01	16 - 5
52G-17531-11	16 - 5
52G-17531-21	16 - 5
52G-17531-31	16 - 5
52G-17531-41	16 - 5
52G-17531-51	16 - 5
1J7-17537-Y0-30	23 - 8
1J7-17537-Y0-40	23 - 8
1J7-17537-Y0-50	23 - 8
5GT-1755A-00	16 - 25
5GT-17551-00	16 - 9
5GT-17556-00	16 - 14
5GT-17576-00	16 - 27
5GT-17582-00	15 - 8
5GT-17583-00	15 - 34
4WV-17611-00	14 - 24
4WV-17620-10	14 - 12
4WV-17623-00	14 - 15
4WV-17632-00	14 - 14
4WV-17639-10	14 - 19
4WV-17641-00	14 - 23
4WV-17644-00	14 - 34
4WV-17653-00	14 - 16
4WV-17654-01	14 - 17

PARTNO.	REF. NO.
4WV-17660-10	14 - 27
4CW-17664-00	14 - 31
4WV-17670-00	14 - 28
5GT-17681-00	15 - 1
4WV-17684-00	14 - 33
4WV-17811-00	15 - 38
59V-17811-00	15 - 43
4WV-17831-00	15 - 40
4WV-17841-00	15 - 41
4WV-18115-00	18 - 9
4WV-18131-00	18 - 17
2H9-18154-00	18 - 8
4WV-18174-00	18 - 15
4WV-18191-00	18 - 7
4SH-18198-00	18 - 1
4WV-18300-02	18 - 14
4WV-18318-00	24 - 23
4WV-18319-00	24 - 27
4WV-18323-00	17 - 8
5GT-18431-00	18 - 12
5GT-18511-00	17 - 4
5GT-18512-00	17 - 5
4WV-18514-00	24 - 25
5GT-18531-00	17 - 6
4WV-18540-00	17 - 1
4WV-18617-01	18 - 18
5GT-21110-00	19 - 1
4WV-21315-00	19 - 2
5GT-21316-00	19 - 5
5GT-2147A-20	19 - 13
5GT-2147A-30	19 - 13
5GT-2147E-00	19 - 14
4WV-2147J-00	19 - 20
4WV-2151E-00	45 - 4
5FE-2151H-01	45 - 9
4WV-21541-00	20 - 22
4WV-21542-00	20 - 23
4WV-21543-00	20 - 24
4WV-21551-00	20 - 11
4WV-21555-00	20 - 12
4WV-21559-00	20 - 13
4WV-21560-00	20 - 14
5FE-21568-01	45 - 1
5GT-21570-40	45 - 8
5GT-21570-50	45 - 8
5GT-21570-60	45 - 8
5GT-21570-70	45 - 8
5GT-2160A-00	21 - 35

NUMERICAL INDEX

PARTNO.	REF. NO.
4WV-2162H-00	21 - 19
4WV-2162J-00	21 - 31
5GH-2163G-00	45 - 15
5GH-2163G-10	45 - 15
5GH-2163G-20	45 - 15
1UJ-21638-00	22 - 17
4BD-21639-00	44 - 5
4WV-21639-00	21 - 6
59V-21646-00	21 - 38
4WV-21649-00	21 - 7
5GT-2165G-00	45 - 16
5GT-2165H-00	45 - 17
5GT-21669-00	21 - 10
5GT-21669-10	21 - 10
5GT-21669-20	21 - 10
4WV-21691-00	21 - 23
5GT-21696-00	45 - 12
5FE-21697-01	45 - 5
4WV-2171L-00	20 - 10
41R-21717-00	19 - 16
5GT-2175B-00	20 - 2
5GT-2179T-00	8 - 28
5GT-22110-00	22 - 1
1W1-22128-00	25 - 5
4KM-22141-00	22 - 8
4WV-22141-00	22 - 6
4WV-22143-00	22 - 7
4KB-22189-00	22 - 10
5GT-2219X-00	22 - 13
5GT-22210-00	25 - 1
4KB-22591-00	22 - 12
4WV-2331M-00	27 - 16
4WV-23350-00	27 - 6
2HR-23442-00	26 - 3
5GT-23501-00	30 - 14
5GT-23502-00	30 - 37
4WV-23526-00	27 - 3
5GT-23570-01	27 - 1
5GT-23580-01	27 - 2
1UY-23812-00	26 - 7
5GT-23813-01	26 - 1
8K1-23814-00	26 - 4
4WV-23816-00	26 - 2
4WV-23831-00	26 - 16
	26 - 21
1UY-23841-01	26 - 17
	26 - 22
1UY-23845-01	26 - 18

PARTNO.	REF. NO.
1UY-23845-01	26 - 23
4KB-23868-01	26 - 9
5GT-23872-00	19 - 25
1UY-23894-01	26 - 11
4WV-24110-00	28 - 1
4WV-2414H-00	28 - 21
5GT-2414H-00	28 - 21
26H-24145-00	21 - 4
2HX-24181-00	20 - 25
4GY-24188-00	19 - 26
4SH-24260-00	28 - 25
4SH-24261-00	28 - 26
4WV-24327-00	11 - 18
4WV-24411-00	9 - 2
5GT-24500-00	28 - 3
4X8-24512-00	28 - 7
3AJ-24523-00	28 - 4
3AJ-24534-00	28 - 5
1UY-24610-00	28 - 2
4WV-24710-A0	29 - 1
4WV-24710-40	29 - 1
4WV-24731-A0	29 - 2
4WV-24731-40	29 - 2
4WV-2476U-00	29 - 7
59V-24775-00	29 - 5
4WV-24776-00	29 - 6
24W-2483H-00	36 - 13
5GT-24841-00	36 - 7
5GT-24841-20	36 - 7
5GT-24842-00	36 - 9
5GT-24842-10	36 - 9
3MX-24875-A0	45 - 19
	45 - 21
3GC-24877-A0	45 - 20
4WV-24877-A0	45 - 22
5GT-2510F-00	30 - 7
	30 - 30
5GT-2510G-00	30 - 8
	30 - 31
5GT-2510H-00	30 - 9
	30 - 32
5GT-2510J-00	30 - 10
	30 - 33
4WV-2511G-00	30 - 11
	30 - 34
5GT-25111-00	30 - 18
	30 - 41
5GT-2512A-00	30 - 6

PARTNO.	REF. NO.
5GT-2512A-00	30 - 29
	32 - 43
4WV-2512G-00	30 - 12
	30 - 35
3GH-25129-00	32 - 18
4WV-2514A-01	31 - 22
5GT-25180-20	30 - 1
	30 - 24
5GT-25180-30	30 - 1
	30 - 24
5GT-2531E-00	32 - 36
4GB-25321-00	32 - 17
3Y6-2533A-01	32 - 24
5GT-25336-00	32 - 39
4WV-25351-00	32 - 22
148-25353-00	32 - 23
4WV-25355-00	32 - 25
4SH-25367-00	32 - 16
5GT-25381-00	32 - 33
5GT-25381-10	32 - 33
5GT-25383-00	32 - 1
5GT-25390-20	32 - 3
	32 - 8
5GT-25390-30	32 - 3
	32 - 8
4WV-2580T-00	31 - 5
4WV-2580U-00	31 - 13
4WV-2582T-00	31 - 1
	31 - 3
3GD-25827-00	31 - 10
3GD-25828-00	31 - 18
4H7-25852-00	34 - 4
4L0-25854-00	34 - 3
2GU-25866-00	34 - 14
56A-25867-00	34 - 6
4WV-25870-00	34 - 1
4WV-25871-00	34 - 12
4WV-25872-00	34 - 10
4WV-25873-00	34 - 11
4GB-25875-00	34 - 15
4WV-25875-00	34 - 22
4GB-25876-00	34 - 16
4WV-25876-00	34 - 23
4WV-25882-00	34 - 13
3GD-25916-00	31 - 12
	31 - 20
3GD-25933-00	31 - 11
	31 - 19

PARTNO.	REF. NO.
2HR-26111-00	33 - 1
4WV-26124-01	33 - 3
1NV-26129-00	33 - 20
5FE-26232-00	33 - 4
3GB-26241-00	33 - 2
1NV-2625G-01	33 - 21
1NV-2625K-00	33 - 18
4WV-26250-00	33 - 11
1NV-26259-01	33 - 17
1UY-26259-00	34 - 9
4KB-2628F-00	33 - 12
4KB-2628G-00	33 - 13
1NV-26304-00	33 - 16
4WV-26311-00	33 - 6
4WV-26331-01	33 - 30
8G8-26333-00	33 - 31
4WV-26341-00	33 - 7
20E-26343-00	33 - 8
	35 - 15
5GT-26351-00	35 - 9
4WV-2637F-00	18 - 20
1NV-26398-00	33 - 15
128-27114-00	35 - 5
	35 - 17
	35 - 20
278-27114-00	44 - 6
371-27114-00	29 - 4
4N0-27114-00	19 - 15
	22 - 14
5GT-27211-00	35 - 4
5GT-27411-00	35 - 1
5GT-27412-00	35 - 32
5GT-27421-00	35 - 2
4WV-27453-00	35 - 22
4WV-27463-10	35 - 27
5GT-27481-00	35 - 16
4WV-27486-00	35 - 24
5GT-27488-00	35 - 19
4WV-27496-00	35 - 25
4WV-27497-00	35 - 28
4WV-28100-00	19 - 29
1NV-2811A-00	19 - 30
3FA-2819R-00	45 - 18
5GT-2836B-00	33 - 5
2HR-28415-00	36 - 3
5GT-2845N-30	36 - 1
5GT-2845N-50	36 - 1
5GT-2845R-00	36 - 4

PARTNO.	REF. NO.
5GT-46101-00	23 - 1
2H7-46102-00	23 - 4
4KD-46107-00	23 - 36
5GT-46107-00	24 - 43
5GT-46108-00	24 - 47
24W-46117-00-25	23 - 22
24W-46117-00-30	23 - 22
24W-46117-00-40	23 - 22
24W-46117-00-50	23 - 22
24W-46118-00-12	23 - 14
24W-46118-00-14	23 - 14
24W-46118-00-16	23 - 14
24W-46118-00-18	23 - 14
24W-46118-00-20	23 - 14
4WV-46119-00	24 - 15
4WV-46119-10	24 - 15
4WV-46119-20	24 - 15
4WV-46119-30	24 - 15
4WV-46119-40	24 - 15
4WV-46119-50	24 - 15
4WV-46119-60	24 - 15
4WV-46119-70	24 - 15
4WV-46119-80	24 - 15
5GT-46121-00	24 - 7
4KB-46123-00	16 - 23
5GT-46123-00	23 - 30
29U-46125-00	23 - 11
5GT-46131-00	24 - 16
4WV-46132-00	24 - 36
4WV-46134-00	24 - 28
4WV-46135-00	24 - 29
5GT-46136-00	24 - 57
5GT-46141-00	24 - 14
4WV-46142-00	24 - 13
4WV-46143-00	24 - 22
4WV-46144-00	24 - 4
4WV-46145-00	24 - 8
5GT-46146-00	24 - 5
4WV-46151-00	23 - 2
3HN-46152-01	23 - 18
4WV-46155-00	24 - 17
1FK-46156-00	23 - 26
1FK-46157-00-15	23 - 27
1FK-46157-00-20	23 - 27
4WV-46158-00	24 - 20
4WV-46159-00	24 - 21
4WV-4616A-00	24 - 24
5GT-46160-00	24 - 1

PARTNO.	REF. NO.
4WV-46161-00	24 - 2
4WV-46162-00	24 - 3
4WV-46163-00	24 - 11
4WV-46164-00	24 - 12
4WV-46165-00	24 - 31
4WV-46166-00	24 - 32
4WV-46167-00	24 - 33
4WV-46168-00	24 - 35
5GT-46172-00	23 - 34
5GT-46173-00	24 - 53
2HR-46187-00	23 - 39
5GT-46187-00	24 - 46
	24 - 50
4WV-46441-00	24 - 26
5GT-46470-00	24 - 18
4GB-46513-00	32 - 31
5GT-46540-00	32 - 13
3AJ-81801-00	38 - 5
4WV-81815-00	38 - 6
4XV-8182A-00	38 - 7
3AJ-81826-00	38 - 4
11H-81844-00	38 - 3
1FK-81847-00	38 - 2
4WV-81890-00	38 - 1
59V-81920-00	44 - 47
5GT-81940-00	44 - 10
59V-81942-00	44 - 48
2NL-81950-92	44 - 27
29U-81950-93	44 - 26
5GT-81960-00	44 - 1
3WP-81980-00	44 - 23
4SH-82100-21	44 - 3
4WV-82115-00	44 - 7
4WV-82116-00	44 - 8
50W-82121-00	21 - 5
4WV-82128-00	44 - 4
5GT-82150-00	44 - 12
2GV-82151-00	44 - 13
42X-82151-00	44 - 14
4KL-82155-00	44 - 15
5GT-82180-00	44 - 24
4KJ-82310-10	43 - 6
371-82370-00	43 - 10
4GB-82510-10	44 - 16
3GB-82540-01	43 - 3
3GD-82540-11	24 - 34
4KM-82540-00	43 - 4
4WV-82541-00	44 - 9

NUMERICAL INDEX

PART NO.	REF. NO.
5GT-82560-00	44 - 25
3HN-82579-00	44 - 17
5GT-82590-00	44 - 22
1UA-82591-00	28 - 24
	44 - 30
	44 - 34
	44 - 36
	44 - 41
	44 - 42
1YW-82911-01	42 - 1
2XJ-82913-00	42 - 4
4V4-82913-00	33 - 27
5Y0-83513-00	39 - 8
123-83516-21	44 - 19
	44 - 21
3GM-83517-00	39 - 9
4R0-83517-00	39 - 7
4GB-83519-00	39 - 2
53Y-83524-00	39 - 4
437-83525-00	39 - 5
1M1-83526-00	39 - 3
2HR-83530-01	44 - 18
24W-83530-01	44 - 20
4WV-83536-00	39 - 6
4WV-83550-00	39 - 10
4WV-83570-00	39 - 1
4GB-83591-10	43 - 11
2HT-83912-00	42 - 2
3FA-83912-00	42 - 2
1RX-83922-01	42 - 12
38W-83922-00	42 - 12
437-83936-01	42 - 19
437-83936-11	28 - 22
1YW-83965-00	42 - 3
4GB-83973-00	42 - 18
4WV-83976-00	33 - 26
1YW-83980-00	42 - 9
4WV-84111-01	40 - 7
5GT-84163-00	40 - 14
4KB-84314-00	40 - 1
4WV-84320-00	40 - 2
2GU-84332-00	40 - 5
2GU-84334-00	40 - 6
5EH-84340-00	40 - 3
3L6-84521-00	41 - 4
1K8-84523-00	41 - 3
2E9-84524-00	41 - 5
4XE-84710-00	41 - 1

PART NO.	REF. NO.
3GD-84714-00	41 - 2
5GT-85510-00	37 - 1
5GT-85540-00	43 - 1
5GT-85550-00	37 - 2
4SH-86510-00	44 - 28
90101-06278	32 - 26
90101-10568	3 - 9
90105-060A6	5 - 14
90105-06553	13 - 16
90105-07342	5 - 10
90105-08505	2 - 14
90105-08538	31 - 21
90105-10253	27 - 4
90105-10728	27 - 9
90105-10751	32 - 46
	32 - 48
90105-12425	25 - 2
90105-14367	17 - 11
90109-063E8	4 - 17
90109-063E9	1 - 15
90109-06418	1 - 28
90109-065G4	21 - 2
90109-06576	42 - 5
90109-06577	42 - 13
90109-06723	43 - 7
90109-081F0	19 - 17
90110-06204	2 - 11
90110-06225	5 - 16
90114-10003	32 - 37
90114-10011	30 - 19
	30 - 42
	32 - 2
90116-06475	1 - 4
90116-10263	12 - 38
90116-10378	1 - 5
90116-10506	12 - 37
90116-10593	23 - 3
90119-06018	35 - 29
90119-06056	20 - 8
	21 - 8
90119-06060	21 - 36
90119-06063	8 - 27
	20 - 20
	21 - 17
	21 - 29
90119-06073	28 - 17
90119-06108	19 - 21
	35 - 18

PART NO.	REF. NO.
90119-06108	35 - 21
90119-06205	21 - 9
	21 - 22
	21 - 34
90119-06228	27 - 17
90119-08212	19 - 19
90123-08046	42 - 10
90149-04278	33 - 22
90149-05110	7 - 17
90149-06011	28 - 10
90149-06131	42 - 15
90149-08152	16 - 4
90149-08268	31 - 2
	31 - 4
90151-05023	12 - 10
90154-05052	20 - 17
	21 - 14
	21 - 26
90157-04088	14 - 20
90159-05018	44 - 49
90159-06033	35 - 26
90159-06059	20 - 9
90170-06010	42 - 16
90170-06128	4 - 19
90170-06289	18 - 10
90170-10186	26 - 20
	26 - 25
90170-36279	14 - 35
90171-10046	26 - 26
90171-16048	30 - 22
	30 - 45
	32 - 41
90176-08026	2 - 5
90179-06668	10 - 22
90179-08148	42 - 11
90179-10201	2 - 7
90179-10279	2 - 9
90179-10394	23 - 43
90179-12325	16 - 16
90179-16690	14 - 26
	14 - 36
90179-22526	16 - 7
90179-22640	14 - 9
90179-35625	27 - 7
90179-55660	16 - 30
90179-60699	16 - 11
90183-05042	40 - 8
90185-10060	27 - 5

PART NO.	REF. NO.
90185-12072	25 - 3
90185-14070	16 - 29
90185-14081	26 - 14
90201-03313	45 - 3
	45 - 7
	45 - 11
	45 - 14
90201-047R9	14 - 21
90201-05029	20 - 18
	21 - 15
	21 - 27
90201-060L5	28 - 15
90201-06008	18 - 5
90201-06071	10 - 5
	10 - 13
90201-06074	20 - 4
	41 - 9
90201-076J4	20 - 16
	21 - 13
	21 - 21
	21 - 25
	21 - 33
90201-080L8	2 - 4
90201-08326	10 - 21
90201-085L3	2 - 15
90201-086J0	10 - 19
90201-08730	19 - 7
	19 - 18
90201-08759	27 - 12
90201-101J1	19 - 28
	32 - 47
	32 - 49
90201-10118	32 - 28
	34 - 21
90201-10124	2 - 8
90201-10321	3 - 8
90201-10590	2 - 6
90201-10774	23 - 44
90201-12163	15 - 46
90201-12172	43 - 12
90201-12191	16 - 15
90201-122H1	27 - 14
90201-125L6	13 - 2
90201-127J6	25 - 6
90201-132G5	18 - 3
90201-14222	26 - 13
90201-14633	16 - 28
	24 - 6

PART NO.	REF. NO.
90201-150U6	15 - 30
90201-155G5	41 - 11
90201-15797	35 - 8
90201-162L6	30 - 21
	30 - 44
	32 - 40
90201-190T7	14 - 25
90201-20266	24 - 55
90201-20278	15 - 14
	15 - 17
	15 - 24
90201-250R9	15 - 11
	15 - 21
90201-25289	23 - 33
90202-05193	28 - 9
90202-14077	41 - 6
90206-12075	4 - 20
90209-06174	7 - 29
90240-06076	35 - 12
90240-12092	25 - 4
90249-12008	33 - 10
	35 - 13
90267-32109	45 - 2
	45 - 6
	45 - 10
	45 - 13
90269-05055	18 - 16
90269-07076	20 - 15
	21 - 3
	21 - 12
	21 - 20
	21 - 24
	21 - 32
	28 - 23
90280-16053	3 - 7
90336-28053	26 - 6
90338-22207	1 - 30
90338-34264	22 - 9
90340-14029	23 - 28
	24 - 39
90340-14046	11 - 13
	23 - 15
90340-14117	1 - 7
	12 - 11
90381-08002	15 - 39
90387-0613B	18 - 2
90387-06299	41 - 8
90387-063E6	6 - 5

PART NO.	REF. NO.
90387-06387	20 - 6
90387-065J6	40 - 12
90387-066J1	28 - 12
90387-0714B	7 - 28
90387-07598	28 - 16
90387-090R0	26 - 12
90387-1707V	22 - 4
90387-1910N	14 - 22
90387-2508C	14 - 10
90387-255H9	23 - 10
90387-2611X	15 - 4
90387-2611Y	14 - 5
90387-284T0	32 - 34
90401-06001	1 - 25
90401-10159	34 - 20
90430-05126	7 - 18
90430-06014	1 - 29
90430-06192	1 - 26
90430-08119	12 - 15
90430-08178	2 - 16
	7 - 40
	12 - 40
90430-10148	43 - 5
90430-14194	17 - 12
90445-072J3	24 - 41
90445-072J4	23 - 45
90445-080K8	32 - 44
90445-083J5	28 - 20
90445-10679	28 - 18
90450-57044	8 - 6
90450-63088	8 - 4
90450-64089	12 - 34
90460-64065	8 - 26
90460-75020	8 - 24
90460-99289	22 - 11
90461-08113	12 - 44
90464-07209	44 - 35
90464-10112	44 - 43
90464-12036	44 - 33
90464-13073	44 - 31
	44 - 32
	44 - 38
90464-20094	44 - 45
90464-20159	44 - 46
90464-25098	44 - 40
90464-30040	44 - 37
90464-48174	44 - 44
90465-08389	11 - 33

NUMERICAL INDEX

PARTNO.	REF. NO.
90465-10090	11 - 32
90467-07029	23 - 46
	24 - 42
90467-08075	32 - 45
90467-09103	28 - 19
90467-14015	11 - 19
90467-22080	8 - 20
90468-15139	44 - 39
90468-16191	26 - 15
90480-01400	20 - 5
	28 - 14
90480-10297	44 - 51
90480-12072	40 - 11
90480-14088	41 - 7
90480-14229	6 - 4
90480-15235	7 - 27
90480-18290	28 - 11
90501-051L0	5 - 3
90501-10312	42 - 17
90501-10353	17 - 10
90501-10782	33 - 9
	35 - 14
90501-141L1	17 - 7
90501-18576	7 - 10
90501-235L9	24 - 56
90501-260L6	23 - 31
90501-623L6	14 - 32
90501-650L5	16 - 21
90506-16482	32 - 30
90506-18527	35 - 6
90507-20002	32 - 20
90508-23567	29 - 3
90508-35764	18 - 4
90560-06243	36 - 10
90560-30325	30 - 17
	30 - 40
91A20-07010	8 - 10
91317-05012	37 - 5
91317-06012	12 - 6
91317-06016	7 - 21
91317-06018	1 - 22
91317-06020	1 - 27
	8 - 3
91317-06025	1 - 12
91317-06035	2 - 10
91317-06040	1 - 13
91317-06050	1 - 16
	7 - 5

PARTNO.	REF. NO.
91317-06055	1 - 14
91317-06115	1 - 11
91317-06125	1 - 10
91317-08020	24 - 19
91317-08050	11 - 9
91401-20012	35 - 11
91401-20020	26 - 28
	27 - 11
91401-30025	25 - 7
91401-30030	30 - 23
	30 - 46
	32 - 42
92907-05600	8 - 18
	33 - 29
92907-06100	42 - 8
92907-06200	35 - 10
	40 - 13
92907-06600	1 - 17
	34 - 8
	37 - 4
	43 - 9
92907-08600	16 - 19
	23 - 24
	34 - 19
92907-10200	19 - 9
	30 - 5
	30 - 28
	32 - 7
	32 - 12
92990-10600	10 - 8
	26 - 27
93101-12168	12 - 17
93101-25106	3 - 19
93101-30084	16 - 13
93101-30171	7 - 38
93101-31167	14 - 13
93101-35097	22 - 18
93101-38098	23 - 13
93101-52116	23 - 5
93102-08307	15 - 47
93102-15212	17 - 3
93102-25017	22 - 3
93102-25081	19 - 24
93102-25099	19 - 23
93102-28476	12 - 8
93102-35380	24 - 30
93102-35463	11 - 27
93102-38417	30 - 16

PARTNO.	REF. NO.
93102-38417	30 - 39
93102-42322	15 - 6
93102-44454	16 - 31
93102-65386	23 - 19
93104-09025	33 - 19
93104-41119	14 - 29
93106-47040	32 - 15
93112-31011	26 - 8
93210-06422	7 - 24
93210-08521	4 - 16
93210-10096	7 - 34
93210-10197	7 - 22
93210-12131	32 - 38
93210-12152	7 - 31
93210-13657	1 - 8
93210-14104	32 - 21
	39 - 12
93210-14359	24 - 9
93210-14369	12 - 12
93210-16290	3 - 10
93210-17718	22 - 5
93210-19522	1 - 24
93210-24253	15 - 42
93210-25755	14 - 11
93210-26606	32 - 35
93210-26741	15 - 5
93210-27370	11 - 12
93210-27666	30 - 20
	30 - 43
93210-32172	1 - 19
	15 - 45
93210-35520	7 - 12
93210-36769	8 - 2
93210-41041	19 - 31
93210-44545	14 - 30
93210-50768	24 - 37
93210-59531	23 - 12
93210-62523	1 - 21
93210-64297	7 - 15
93210-65705	23 - 29
93210-69628	24 - 10
93210-78544	16 - 17
93210-85706	23 - 42
93210-98473	2 - 2
93211-51749	23 - 21
93211-594A4	14 - 18
93306-00208	17 - 2
93306-00612	15 - 3

PARTNO.	REF. NO.
93306-00612	16 - 24
93306-00615	30 - 15
	30 - 38
93306-00805	32 - 14
93306-01002	11 - 26
93306-07801	12 - 7
93306-20120	12 - 16
93306-20228	14 - 7
93306-20331	19 - 22
93306-20434	15 - 2
93306-20517	16 - 26
93306-20531	22 - 19
93306-20622	16 - 2
93306-20715	16 - 12
93306-30209	15 - 25
93306-30441	15 - 26
93306-30525	3 - 17
93306-30534	3 - 18
93306-30568	23 - 9
93306-30702	3 - 11
93306-37206	16 - 10
93310-32590	15 - 9
	15 - 19
93310-420F2	15 - 15
93310-637D3	3 - 5
93311-42077	15 - 37
93311-51554	15 - 29
93316-01301	23 - 20
93317-85569	23 - 6
93332-00080	22 - 2
93399-99926	23 - 37
	23 - 40
93399-99948	24 - 44
	24 - 48
	24 - 51
93410-20038	15 - 18
93410-22039	23 - 35
93410-32075	27 - 8
93410-46079	14 - 6
93430-12008	35 - 7
93440-12052	1 - 3
93440-14155	15 - 36
93440-20088	23 - 38
	23 - 41
	24 - 45
	24 - 49
	24 - 52
93440-25084	15 - 12

PARTNO.	REF. NO.
93440-25084	15 - 22
	15 - 33
93450-22119	30 - 13
	30 - 36
93450-24028	3 - 15
93450-42138	7 - 39
93503-08007	17 - 9
93603-14240	15 - 35
93612-16254	7 - 32
93900-00022	30 - 3
	30 - 26
	32 - 6
	32 - 10
94108-1215F	30 - 2
	30 - 25
94110-1215G	32 - 5
	32 - 9
94590-27126	5 - 11
94701-00275	1 - 9
95027-06008	44 - 11
95027-06012	7 - 25
	7 - 36
	11 - 16
	11 - 29
	11 - 31
	12 - 19
	12 - 45
95027-06020	7 - 16
	11 - 23
	15 - 48
95027-06025	7 - 41
95027-06030	38 - 8
95027-06035	11 - 8
95027-06040	7 - 42
	11 - 6
	12 - 22
95027-06045	12 - 4
95027-06055	11 - 7
95027-06060	11 - 5
95027-06090	11 - 4
95027-10016	32 - 29
95307-05700	33 - 23
95307-06600	32 - 27
95307-06700	18 - 11
95307-06800	41 - 10
95307-10700	26 - 19
	26 - 24
95337-10600	27 - 10

PARTNO.	REF. NO.
95607-05100	33 - 14
95607-06100	36 - 12
	42 - 6
	42 - 14
95607-06200	21 - 37
95607-10200	19 - 12
95607-12200	22 - 21
95617-12100	27 - 15
95702-06500	13 - 8
95707-05300	20 - 19
	21 - 16
	21 - 28
95707-05500	44 - 50
95707-06500	20 - 21
	21 - 18
	21 - 30
95707-10500	30 - 4
	30 - 27
	32 - 4
	32 - 11
95807-06010	39 - 11
95807-06014	12 - 35
	35 - 23
95807-06016	35 - 33
95807-06020	7 - 30
	44 - 2
95807-06025	6 - 6
95807-06030	28 - 13
95807-08020	18 - 19
	20 - 7
95817-06010	10 - 4
	10 - 12
	10 - 15
95817-06016	18 - 13
95817-06030	20 - 3
95817-06035	18 - 6
95817-08012	19 - 3
95817-08014	19 - 6
95817-08016	36 - 2
	36 - 5
	36 - 8
95817-08020	10 - 20
	36 - 6
95817-08040	16 - 8
	32 - 32
95817-08045	10 - 18
95817-10020	35 - 3
95817-10025	19 - 27

NUMERICAL INDEX

PARTNO.	REF. NO.
95817-10025	23 - 25
95817-10035	19 - 8
95817-10080	19 - 4
95817-10140	19 - 11
95817-10190	19 - 10
95817-12050	27 - 13
95827-06012	31 - 23
	34 - 17
	34 - 24
95827-06035	36 - 11
95827-08012	12 - 14
	22 - 15
95827-08050	26 - 5
95827-10016	22 - 16
95827-12025	22 - 20
95885-10014	10 - 7
97007-06008	10 - 17
97007-06020	43 - 8
97007-06025	34 - 7
97027-08025	23 - 23
97027-08030	16 - 18
	34 - 18
97027-08060	26 - 10
97602-04112	9 - 25
97607-04210	33 - 25
97707-50016	40 - 9
97707-50025	40 - 10
97801-03008	28 - 6
98502-04006	9 - 16
98502-05008	9 - 12
98502-05010	9 - 30
98502-05014	9 - 24
98507-03540	40 - 4
98507-05016	8 - 17
98507-05020	33 - 24
	33 - 28
98507-06008	7 - 3
98507-06016	15 - 44
98507-06020	42 - 7
98507-06030	15 - 49
	37 - 3
98606-04018	28 - 8
98706-04012	34 - 5
98707-06010	11 - 22
98907-06014	12 - 43
	12 - 48
98907-06016	43 - 2
	44 - 29

PARTNO.	REF. NO.
99009-11400	7 - 7
99009-15400	15 - 31
99009-19400	24 - 54
99009-25400	23 - 32
99009-35500	14 - 8
99530-08016	2 - 17
	7 - 43
	12 - 39
99530-10014	11 - 2
	11 - 24
	12 - 3
	12 - 21
99530-10116	1 - 6
99530-12016	2 - 13
99530-14016	12 - 36

PARTNO.	REF. NO.	PARTNO.	REF. NO.	PARTNO.	REF. NO.	PARTNO.	REF. NO.